Lafayette ES - Door and Window Details

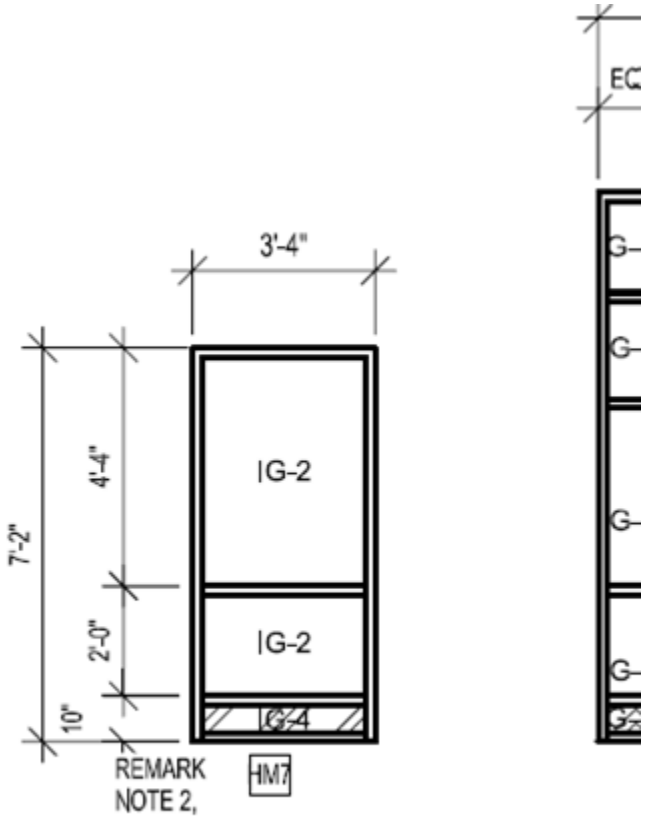

R AS SCHEDULED

GLASS TYPE KEY

IG-1 1/4" CLEAR GLASS

IG-2 1/4" CLEAR TEMPERED GLASS

IG-3 1/4" FROSTED TEMPERED GLASS

IG-4 INSULATED METAL INFILL PANEL

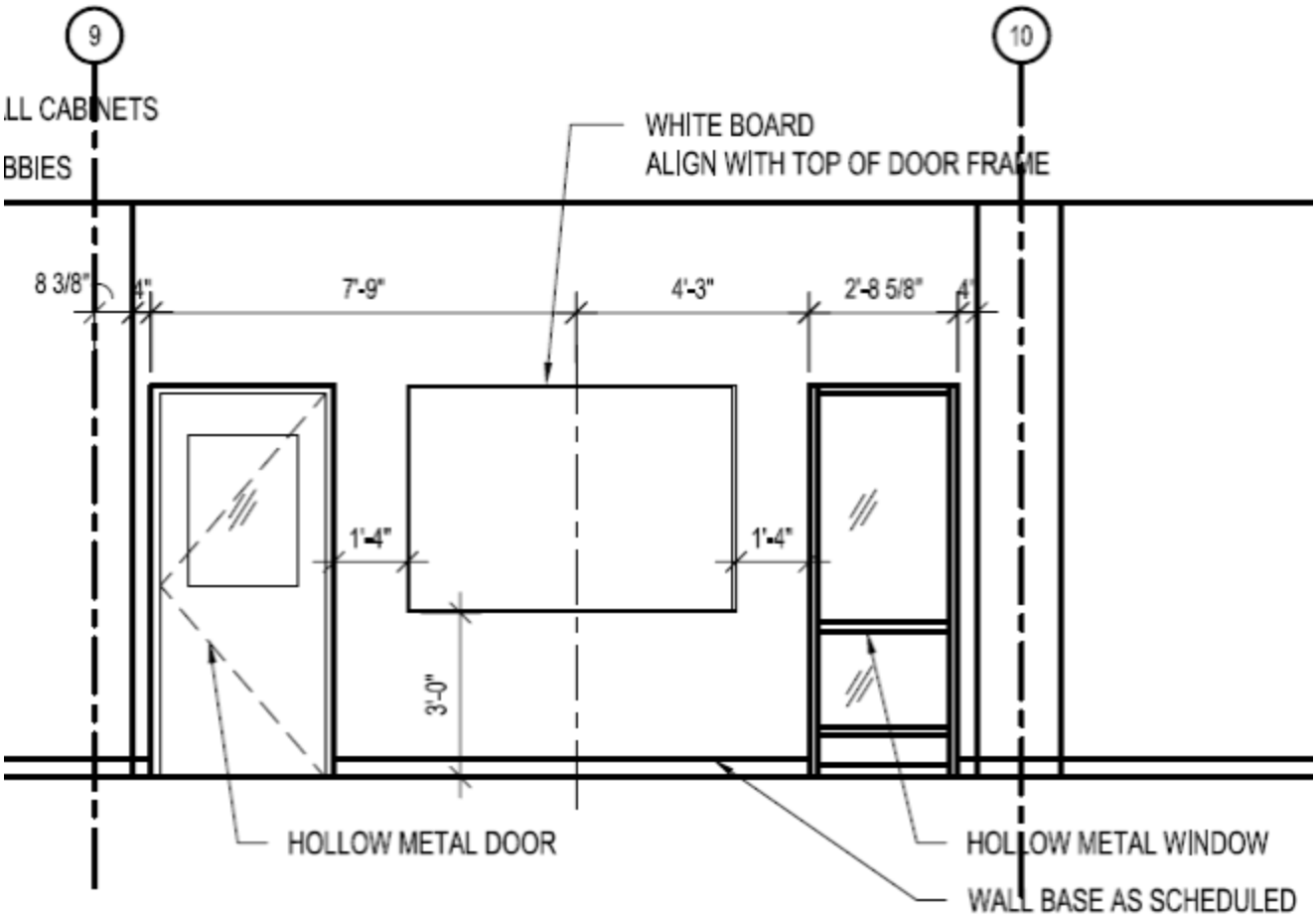

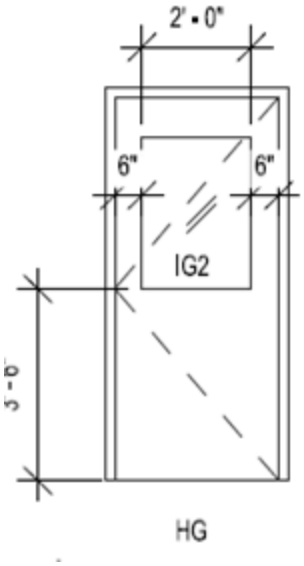

General Notes –

Paint Color - Match Existing Adjacent Classroom

Door Hardware – Match Existing Hardware Throughout School