GOVERNMENT OF THE DISTRICT OF COLUMBIA
DEPARTMENT OF GENERAL SERVICES

DESIGN-BUILD SERVICES
CHUCK BROWN MEMORIAL

Solicitation #: DCAM-14-CS-0059

Addendum No. 2
Issued: October 11, 2013

This Addendum Number 02 is issued by e-mail on October 11, 2013. Except as modified hereby, the Request for Proposals ("RFP") remains unmodified.

Item #1

Form of Contract: Attached to this Addendum is the Form of Contract. THE TERMS OF THE FORM OF CONTRACT SHALL PREVAIL OVER THE RFP. TO THE EXTENT THERE IS AN INCONSISTENCY BETWEEN THE FORM OF CONTRACT ISSUED HEREWITH AND THE RFP, THE FORM OF CONTRACT SHALL GOVERN.

Item #2

Electrical Building and Service Information: Please see attached drawing regarding the electrical building and service information.

Item #3

The bid date remains unchanged. Proposals are due by **October 18, 2013 at 2:00 pm EDT**. Proposals that are hand-delivered should be delivered to the attention of: Shannon Harris, Contract Specialist, at **Frank D. Reeves Center, 2000 14th Street, NW, 8th floor, Washington, DC 20009**.

- End of Addendum No. 2 -

DESIGN-ASSIST CONSTRUCTION AGREEMENT
FOR DESIGN-BUILD SERVICES
CHUCK BROWN MEMORIAL
DCAM-14-CS-0059

THIS AGREEMENT ("Agreement" or "Contract") is made by and between the **DISTRICT OF COLUMBIA GOVERNMENT**, acting by and through its **DEPARTMENT OF GENERAL SERVICES** (the "Department") and **[SELECTED OFFEROR]**, duly organized under the laws of _____, and with a place of business at _____ (the "Builder").

A. PROJECT INFORMATION

Project Name: Design-Build Services for the Chuck Brown Memorial (the "Project")
Lump Sum Amount: [Insert Bid Amount]
General Description of Work: Attached hereto as **Exhibit A**.
Required Design Services: Attached hereto as **Exhibit A**.
Completion Date: May 1, 2014
Project Manager: [INSERT NAME AND CONTACT INFORMATION]
Liquidated Damages: Seven Hundred Fifty Dollars ($750) per calendar day not to exceed Thirty Thousand Dollars ($30,000) in the aggregate.

B. ATTACHMENTS

Exhibit A: Concept Design
Exhibit B: Schedule of Values
Exhibit C: LSDBE Utilization Plan
Exhibit D: List of allowances
Exhibit E: Key Personnel
Exhibit F: Davis Bacon Act Wage Determinations
Exhibit G: Workforce Utilization Plan

C. TERMS & CONDITIONS

SECTION 1 GENERAL PROVISIONS

Section 1.1 Relationship of Parties. The Builder accepts the relationship of trust and confidence established with the Department by this Agreement, and covenants with the Department to furnish the Builder's reasonable skill and judgment and to cooperate with the Program Manager in furthering the interests of the Department. The Builder shall use its best efforts to perform the Project in an expeditious and economical manner consistent with the interests of the Department.

Section 1.2 Project Description. Exhibit A (the "Concept Design") provides a general description of the Project. The Builder understands and agrees that detailed design

documents have not been prepared for the Project and that it has submitted a bid to deliver a complete and fully functioning Project that meets the requirements of the Concept Design. To the extent any design services are required to complete the Project (such as, but not necessarily limited to, the preparation of permit documents, shop drawings, etc.), the preparation of such design documents or drawings **are** included within the Builder's scope of work.

Section 1.3 **Completion Date.** Subject to the Excusable Delay provisions of this Agreement, the Builder agrees to substantially complete the Project on or before May 1, 2014 (the "Substantial Completion Date").

Section 1.4 **Project Manager.** The Department has assigned a Project Manager to oversee the Builder's work. The name and contact information for the assigned Project Manager is specified in the Project Information section of this Agreement. The Builder shall take direction from, and coordinate its work with, the assigned Project Manager. The Builder acknowledges, however, that the Project Manager shall not be authorized to modify any of the rights or obligations of the Department or the Builder pursuant to this Contract, or to issue Change Orders or Change Directives.

Section 1.5 **Prolog.** The Builder shall utilize the Department's Prolog system to submit any and all documentation required to be provided by the Builder for the Project, including, but not limited to: (i) requests for information; (ii) submittals; (iii) meeting minutes; (iv) proposed Changes; and (v) applications for payment. The Builder also shall require all major subcontractors and subconsultants to utilize prolog for the Project

SECTION 2 PRECONSTRUCTION DELIVERABLES

Section 2.1 **Detailed Schedule.** Within seven (7) days of the issuance of a Notice to Proceed for Preconstruction Services, the Builder shall submit to the Department for its approval a schedule of Project. Such schedule shall include a schedule for submittals that is reasonably acceptable to the Project Manager.

Section 2.2 **Potential Subcontractors and Suppliers.** The Builder shall furnish to the Project Manager a list of the subcontractors and suppliers that will work on this Project as well as a general description of each such subcontractor's scope of work. Within five (5) business days after such list is submitted, the Project Manager shall advise the Builder if it has any objection to any of the listed subcontractors or suppliers. In the event the Project Manager has a reasonable objection to any such subcontractor or supplier, the parties shall discuss such objection and agree on an appropriate course of action.

Section 2.3 **Design Services.** The Project Information Section of this Agreement includes a brief narrative description of the design services that are necessary to complete this Project. The Builder understands that the description of such services is intended to provide only a brief description of such services and the Builder shall be required to provide, at no additional cost to the Department, such design services as are necessary to implement the Project. Within

seven (7) days after this Agreement is signed, the Builder and the Project Manager shall agree upon the exact design services to be required.

Section 2.4 **Design Reviews/Submittals.** On or before the dates specified in the approved detailed schedule (see Section 2.1), the Builder shall submit the necessary design information (i.e. permit drawings, shop drawings, submittals, sketches, etc.) to the Project Manager for his review and approval. Unless a different timeframe is established in the approved detailed schedule, the Project Manager shall have five (5) business days to review such documents. In the event the Project Manager finds such documents to be unacceptable, the Builder shall be required to revise and resubmit such documents. The Builder shall not commence construction activities unless and until such documents have been approved by the Project Manager. Any delays that result from design resubmissions shall be considered Non-Excusable.

Section 2.5 **Letter Contract.** It is understood and agreed that certain of the preconstruction activities described above were performed while the Letter Contract was in place, and the terms of the Letter Contract shall merge into and be superseded by this Agreement upon it execution.

SECTION 3 CONTRACT SUM

Section 3.1 **Lump Sum Price.** The Builder shall be paid a lump sum price in the amount set forth in the Project Information Section of this Agreement to Fully Complete the Project.

Section 3.2 **Nature of the Lump Sum Price.** The Builder acknowledges and understands that the Lump Sum Price is based on the Concept Design included with **Exhibit A**. It is understood and agreed that the Lump Sum Price represents the Builder's offer to Fully Complete the Project. The parties acknowledge and agree that it is their intent to have the Builder to construct and deliver a fully functional facility as contemplated in the Concept Design for the Lump Sum Price and consistent with the Project Schedule. In furtherance of such intent, the Builder hereby assumes the risks associated with and shall be responsible for (i) any changes in market conditions that affect the cost of labor or materials; (ii) coordination issues between the drawings; (iii) elements of work not shown on the Concept Design, but which are reasonably inferable from the Concept Design; (iv) cost associated with acceleration of the work and expediting of materials necessary to meet the Project Schedule which are the result of anything other than an Excusable Delay; and (v) the risk of subcontractor default.

Section 3.3 **Risks Assumed by Builder.** Execution of the Agreement by the Builder is a representation that the Builder has thoroughly examined the terms of this Agreement and the Concept Design and has visited the Project site and has become familiar with local conditions under which the Work is to be performed. The Builder further represents that it has satisfied itself that it can undertake the work for the stated cost. Among other things, by entering into this Agreement, the Builder assumes the following risks: (1) the nature of the land and subsoil; (2) the form and nature of the site and surrounding areas; (3) details and levels of existing pipe lines,

conduits, sewers, drains, cables or other existing services; (4) the quantities, nature and availability of the materials, tools, equipment and labor necessary for the completion of the Work; (5) the means of access to the site and any accommodation that may be required; (6) uncertainties of weather and physical conditions at the site; and in general to have itself obtained all necessary information as to risk contingencies, climatic, hydrological and natural conditions and other circumstances which may influence or affect his performance of the Work.

Section 3.4 **Allowances.** To the extent that the Lump Sum Price includes one or more allowances identified on **Exhibit D**, the Lump Sum Price shall be adjusted (either upward or downward) by change order to reflect the actual cost of the work covered by such allowance.

Section 3.5 **Tax Exempt Status.** The Department expects that the Project will qualify as tax-exempt under the applicable laws, and such tax exemption shall be reflected in the Lump Sum Price.

Section 3.6 Subject to the terms and conditions of this Agreement, the Lump Sum Price shall be increased by two percent (2%) if both of the objectives set forth below are met and shall be decreased by two percent (2%) if either or both of the objectives set forth below are not met. The objectives are as follows:

.1 **On-Time Completion.** Substantial Completion is achieved on or before May 1, 2014.

.2 **Cost Control.** The total amount paid to the Builder for Work performed under this Contract is less than or equal to the Lump Sum Price and regardless of any increases authorized by subsequent Change Order plus Thirty Thousand Dollars ($30,000).

In determining whether these objectives have been met, the Department will evaluate whether the stated objectives have, in fact, been achieved. This decision shall be made regardless of the reason the objectives have or have not been met, and the Builder acknowledges and agrees that the Builder may lose entitlement to such portion of the Lump Sum Price even if objectives are not met due to the fault of the Department, the Architect/Engineer, the Code Official, events of force majeure or otherwise.

SECTION 4 CONSTRUCTION PHASE

Section 4.1 **General.** The Construction Phase shall commence when the Project Manager issues a Notice to Proceed for Construction.

Section 4.2 **Mandatory Subcontract Provisions.** To the extent the Builder intends to subcontract a portion of the work, any subcontract in excess of $25,000 shall include the following provisions:

.1 that, to the extent of the Work or supply within the agreement's scope, the Subcontractor or supplier is bound to the Builder for the performance of all obligations which the Builder owes the Department under the Contract;

.2 that the Subcontractor or supplier is not in privity with the Department and shall not seek compensation directly from the Department on any third-party beneficiary, quantum meruit, or unjust enrichment claim, or otherwise, except as may be permitted by any applicable mechanic's lien law;

.3 that the Department is a third-party beneficiary of the subcontract or supply agreement, entitled to enforce any rights thereunder for its benefit;

.4 that the Subcontractor or supplier consents to assignment of its agreement to the Department, at the Department's sole option, if the Builder is terminated for default;

.5 that the Subcontractor or supplier shall comply immediately with a written order from the Department to the Builder to suspend or stop work;

.6 that the Subcontractor or supplier shall maintain records of all Work it is requested or authorized to do on a time and material or cost-plus basis, or with respect to claims that it has asserted on a time and materials or cost-plus basis, during the Project and for a period of time specified in the General Conditions and requiring the Subcontractor or supplier to make those records available for review or audit by the Department during that time;

.7 that the Subcontractor shall obtain and maintain, throughout the Project, workers' compensation insurance in accordance with the laws of the District of Columbia. It understood that this provision is not applicable to supply agreements;

.8 that, if the Department terminates the Contract for convenience, the Builder may similarly terminate the subcontract or supply agreement for convenience, upon seven (7) days' written notice to the Subcontractor or supplier, and that the Subcontractor or supplier shall, in such a case, be entitled only to the costs set forth in the Termination for Convenience provisions of this Agreement;

.9 that the Department shall have the right to enter into a contract with the Subcontractor or supplier for the same price as its subcontract or supply agreement price less amounts already paid, if the Builder files a voluntary petition in bankruptcy or has an involuntary petition in bankruptcy filed against it;

.10 that the Subcontractor or supplier shall not be entitled to payment for defective or non-conforming work, materials or equipment, and shall be obligated promptly to repair or replace non-conforming work, materials or equipment at its own cost;

Section 4.3 **Certified Subcontractors.** The Builder shall not substitute or replace any Subcontractor or supplier certified by the District of Columbia Department of Small and Local Business Development without the Department's prior written consent.

Section 4.4 **Payment by Joint Check in Certain Instances.** If it comes to the Department's attention that a Subcontractor or supplier has not been paid in timely fashion (other than for disputed amounts), and if the Builder fails to cure the problem within five (5) calendar days after the Department gives it written notice of the failure to pay, the Department may make payments to the Subcontractor or supplier and Builder by joint check.

Section 4.5 **Field Measurements.** Builder shall take field measurements and verify field conditions and shall carefully compare such field measurements and conditions and other information known to Builder. Once work is started, Builder assumes the responsibility and costs for the work and the cost of correcting work previously installed.

Section 4.6 **Warranty of the Construction Work.** The Builder warrants to the Department that materials and equipment furnished under this Agreement will be of good quality and new unless otherwise expressly permitted in writing, that for the one (1) year period following the Substantial Completion Date the construction work will be free from defects not inherent in the quality required or permitted, and that the Work will conform to the Concept Design and/or any approved design documents. The Builder's warranty excludes remedy for damage or defect caused by abuse, modifications not executed by the Builder, improper or insufficient maintenance, improper operation, or normal wear and tear and normal usage. The Design-Builder and a representative of the Department shall walk the Project together eleven (11) months after the Substantial Completion Date to identify any necessary warranty work.

Section 4.7 **Extent of Responsibility and Soils Conditions.** The Builder shall be entitled to an equitable adjustment for differing site or soils conditions only to the extent that: (i) the subsurface conditions on or adjacent to the Project site differ materially from those indicated in the geotechnical reports provide to the Builder by the Department; or (ii) such conditions could not have been discovered by a competent visual inspection of the site and are of unusual nature and differ materially from those ordinarily encountered and generally recognized as inhering to work of the character provided for in this Agreement (such circumstances, "Differing Site Conditions").

Section 4.8 **Unsafe Materials and Hazardous Materials**

Section 4.8.1 The Builder shall not bring, spill or release onto the site asbestos, PCBs, or any other Hazardous Material that is not customarily used in a facility of the type and similar to the Project, and shall bring to the Department's attention any specification of such Hazardous Materials in the design documents. If the Builder believes that anything in this Agreement would require that it use or bring onto the site asbestos, PCBs, or any Hazardous Material that is not customarily used in a facility of the type and similar to the Project, it shall immediately inform the Department and seek direction before proceeding.

Section 4.8.2 If Hazardous Materials are discovered on the site, the Builder shall immediately inform the Project Manager of such discovery. Unless abatement of such Hazardous Materials is expressly included in the Concept Design or the approved design documents, the Builder shall be entitled to an equitable adjustment by virtue of such discovery.

Section 4.9 **Progress Meetings.** The Builder shall schedule and conduct at a minimum, bi-weekly progress meetings at which the Department, the Program Manager and the Builder and appropriate Subcontractors can discuss the status of the Work.

Section 4.10 **Written Reports.** The Builder shall provide written reports to the Program Manager on the progress of the entire Work in accordance at least every other week.

Section 4.11 **Key Personnel.** To carry out its duties, the Builder shall provide at least the key personnel identified in **Exhibit E** to this Agreement, who shall carry out the functions identified in the Exhibit. The Builder shall not replace any of the key personnel without the Department's prior written approval, which shall not be unreasonably withheld.

Section 4.12 **Work by Separate Contractors.** Department reserves the right to perform construction or operations related to the Project with Department's own forces, and to award separate contracts in connection with other portions of the Project or other construction or operations on the site.

Section 4.13 **Site Safety and Clean-Up.** The Builder will be required to: (i) provide a safe and efficient site, with controlled access; (ii) provide wheel washing stations on site so as to prevent the accumulation of dirt and other refuse on the streets surrounding the Project site; (iii) be responsible for site security; and (iv) be responsible for the cost of temporary power used during the construction of the Project, including, but not limited to, the cost of installing such temporary wiring as may be required.

Section 4.14 **Close-out.** The Builder shall be required to prepare and submit at close-out a complete set of product manuals, warranties, etc. The Builder shall also provide the Department with a complete set of its Project files, including, but not limited to, shop drawings.

Section 4.15 **Salvaged and Stored Items.** The Builder shall be responsible for salvaging and storing all items as identified by the Department.

Section 4.16 **Sediment and Erosion Control.** The Builder shall be responsible for installing sediment and erosion control measures, inclusive of, but not limited to: silt fencing, inlet protection, stabilized construction entrances, and other control measures.

Section 4.17 **Cutting and Patching.** The Builder shall be responsible for cutting, fitting or patching required to complete the Work or to make its parts fit together properly. All areas requiring cutting, fitting and patching shall be restored to the condition existing prior to the cutting, fitting and patching. The Builder shall not damage or endanger a portion of the Work or

fully or partially completed construction of the Department or separate contractors by cutting, patching or otherwise altering such construction, or by excavation.

Section 4.18 <u>Correction of Work.</u>

Section 4.18.1 The Department shall be at liberty to object and to require the Builder to remove forthwith from the Project site and the Work and to promptly replace the Superintendent, any foreman, technical assistant, laborer, agent, representative, or other person used by the Builder in or about the execution or maintenance of the Work, who in the sole opinion of the Department is misconducting himself, or is incompetent or negligent in the proper performance of his duties, or whose performance in the Work is otherwise considered by the Department to be undesirable or unsatisfactory, and such person shall not be again employed upon the Project without the written permission of the Department.

Section 4.18.2 Builder shall promptly correct Work rejected by Department for failing to conform to the requirements of the Concept Design or any approved design document or applicable law or regulations whether observed before or after the Project's completion and whether or not fabricated, installed or completed, and shall correct any Work found to be not in accordance with the requirements within a period of one (1) year from the date of completion or by terms of an applicable special warranty required by this Agreement.

Section 4.18.3 If during the guarantee or warranty period, any material, equipment or system requires corrective Work because of defects in materials or workmanship, Builder shall commence corrective Work within forty-eight (48) hours after receiving the notice and work diligently until corrective Work is completed; provided, however, if such notice is received on the day before a weekend or a holiday, Builder will commence corrective Work on the next business day. If Builder does not, in accordance with the terms and provisions of the Contract Documents, commence all corrective Work within forty-eight (48) hours or if Builder commences such Work but does not pursue it in an expeditious manner, Department may either notify the bonding company (if any) to have such Work and/or obligations performed at no additional cost to Department or may perform such Work and/or obligations and charge the costs thereof to Builder.

Section 4.19 <u>Manufacturers' Warranties.</u>

Section 4.19.1 Builder warrants that all manufacturers' or other warranties on all labor, materials and equipment furnished by Builder or a Subcontractor or supplier shall run directly to or will be specifically assigned to Department on demand or upon Project completion without demand. In the event any issue or defect which would be covered by any warranty arises but is not addressed by the grantor of the warranty, the Builder shall be required to act as the guarantor of the obligations under the warranty and to perform under the terms of the warranty.

Section 4.19.2 Builder warrants that the installation of all materials and equipment shall be in strict accordance with the manufacturers' requirements or specifications.

SECTION 5 CLAIMS FOR ADDITIONAL TIME

Section 5.1 Time is of the essence of this Contract.

Section 5.2 The Builder will perform the Work so that it shall achieve Substantial Completion by the Substantial Completion Date. Unless the failure to achieve Substantial Completion by the Substantial Completion Date is a result of an Excusable Delay, as defined in Section 5.3, the delay shall be deemed Non-Excusable and the Builder shall not be entitled to an extension of time. Without limiting the generality of the foregoing, delays for the following reasons shall be regarded as Non-Excusable and shall not entitle the Builder to an extension of time:

.1 Delays due to job site labor disputes, work stoppages, or suspensions of work;

.2 Delays due to adverse weather, unless the Builder establishes that the adverse weather was of a nature and duration in excess of averages established by data from the U.S. Department of Commerce, National Oceanic and Atmospheric Administration for the Project locale for the ten (10) years preceding the effective date of the Contract;

.3 Delays due to the failure of the Builder or Subcontractors or material suppliers at any tier to perform in timely or proper fashion, without regard to concepts of negligence or fault; or

.4 Delays due to Site conditions whether known or unknown as of the effective date of the Contract, foreseeable or unforeseeable at that time, naturally occurring or man-made; provided, however, that delays due to Differing Site Conditions or remediation of Hazardous Materials shall be deemed an Excusable Delay.

Section 5.3 The Builder shall be entitled to an adjustment in the Substantial Completion Date due to an Excusable Delay. The term "Excusable Delay" shall mean:

.1 Delays due to adverse weather other than those that are classified as a Non-Excusable delay;

.2 Delays due to acts of God, war, unavoidable casualties, civil unrest, and other similar causes of delay that are beyond the control of the Builder; provided, however, that in no event shall a Non-Excusable delay or the action of the Builder, or any of its employees, agents, Subcontractors or material suppliers be deemed an Excusable Delay; or

.3 Delays caused by Differing Site Conditions or remediation of Hazardous Materials remediation.

In addition to the forgoing, a delay shall be deemed to be an Excusable Delay only to the extent that such delay (i) warrants an extension in the Substantial or Final Completion Date; (ii) has not been caused by the Builder or any of its employees, agents, Subcontractors or material suppliers; (iii) is of a duration of not less than three (3) days; (iv) is on Project's critical path; and (v) is in addition to any time contingency periods set forth in the critical path.

Section 5.4 If the Builder wishes to make a claim for an increase in the Contract time, written notice as provided herein shall be given. The Builder's claim shall include an estimate of the cost and of the probable effect of delay on the progress of the Work. In the case of continuing delay, only one claim is necessary.

Section 5.5 **Differing Site Conditions.** The term Differing Site Conditions shall mean subsurface conditions on or adjacent to the Project site which differ materially from those indicated in the geotechnical reports provided to the Builder by the Department. The term Differing Site Conditions shall also include unknown physical conditions at the site of an unusual nature which differ materially from those ordinarily encountered and generally recognized as inhering to work of the character provided for in this Contract. During the Preconstruction Phase, the Design-Builder shall be required to conduct a thorough review of the Project site and the surrounding area and shall document its findings. In the event the Design-Builder fails to undertake and document such a thorough review, the Design-Builder shall be deemed to have known of those conditions which a thorough review would have detected.

SECTION 6 PAYMENT PROVISIONS

Section 6.1 **Compensation.** The Builder shall be paid its compensation in a series of progress payments and a final payment. Progress payments shall be based on a schedule of values that is agreed upon by the Parties as well as the Program Manager's good faith estimate of the level of completion for each component of the schedule of values.

Section 6.2 **Schedule of Values.** The Builder has prepared the Schedule of Values attached hereto as **Exhibit B** which breaks down the Lump Sum Price for the various parts of the Work. The Schedule of Values shall be maintained in such a manner to provide a breakdown of the Lump Sum Price in enough detail to facilitate continued evaluation of applications for payment and progress reports. Large subcontracts shall be broken into several line items where, in the opinion of the Program Manager, such detail is necessary to properly track the progress of the Work. The proposed schedule of values shall also include separate line items for each part of the Work if so required by the Program Manager, which in general shall be required for mechanical systems, vertical transport systems, windows and structural steel, if applicable. The Builder and the Program Manager shall meet as necessary to maintain the schedule of values for the Project in a manner acceptable to the Program Manager. No progress payments shall be made unless the then current Schedule of Values is acceptable to the Program Manager.

Section 6.3 **Retention.** The Department shall withhold from each progress payment an amount equal to ten percent (10%) of each progress payment. Once Substantial Completion has occurred, the Department will reduce the retention being withheld to an amount that is equal

to Two Hundred percent (200%) of the Program Manager's good faith estimate of the remaining Work.

Section 6.4 **Documents Required with Application for Payment.** Each Application for Payment shall be accompanied by the Builder's job cost ledgers in a form satisfactory to the Department, the Subcontractors' and Suppliers' Applications for Payment on AIA Documents G702 and G703 or other form acceptable to the Department, and such other supporting documentation as the Department may reasonably request.

Section 6.5 **Timely Payment of Subcontractors.** Within seven (7) days of receiving any payment from the Department including amounts attributable to Work performed, or materials or equipment supplied, by a Subcontractor or supplier, the Builder shall either pay the Subcontractor or supplier for its proportionate share of the amount paid to the Builder for the Subcontractor's or supplier's Work or materials or equipment, or notify the Department and the Subcontractor or supplier, in writing, of the Builder's intention to withhold all or part of the payment and state the reason for the withholding. All monies paid to the Builder under the Agreement shall be used first to pay amounts due to Subcontractors or suppliers supplying labor or materials for the Project and only money remaining after such payments are made may be retained by the Builder. Monies paid by joint check shall be deemed to have been paid fully to the Subcontractor or supplier named as a joint payee, unless the Department agrees otherwise in writing. Any interest paid to Subcontractors or suppliers because the Builder has failed to pay them in timely fashion shall not entitle the Builder to a Change Order.

Section 6.6 **Lien Waivers.** Each Application for Payment shall be accompanied by written waivers of the right to file a mechanic's lien and all other claims.

Section 6.7 **Submission.** On the twenty-fifth (25th) day of each month the Builder shall submit to the Department (with a copy to the Program Manager) an Application for Payment, which Application for Payment shall cover the entire month during which the Application for Payment is submitted. All amounts formally submitted via Application for Payment and not disputed by the Department shall be due and payable on the last day of the month following submission or, if that is not a business day, on the following business day.

Section 6.8 **Right to Withhold Payments.** The Department will notify the Builder within fifteen (15) days after receiving any Application for Payment of any defect in the Application for Payment or the Builder's performance which may result in the Department's declining to pay all or a part of the requested amount. The Department may withhold payment from the Builder, in whole or part, as appropriate, if:

.1 the Work is defective and such defects have not been remedied; or

.2 the Department has determined that the Builder's progress has fallen behind the Project Schedule, and the Builder fails, within ten (10) calendar days of the Department's written demand, to provide the Department with a realistic and acceptable plan to recover the delays;

.3 the Builder has failed to pay Subcontractors or suppliers promptly or has made false or inaccurate certifications that payments to Subcontractors or suppliers are due or have been made;

.4 any mechanic's lien has been filed against the Department, the site or any portion thereof or interest therein, or any improvements on the site, even though the Department has paid all undisputed amounts due to the Builder, and the Builder, upon notice, has failed to remove the lien, by bonding it off or otherwise, within ten (10) calendar days; or

.5 the Builder is otherwise in substantial breach of this Agreement.

Section 6.9 **Payment Not Acceptance.** Payment of any progress payment or final payment shall not constitute acceptance of Work that is defective or otherwise fails to conform to the Contract, or a waiver of any rights or remedies the Department may have with respect to defective or nonconforming Work.

SECTION 7 INDEMNIFICATION.

Section 7.1 To the fullest extent permitted by law, the Builder shall indemnify and hold harmless the Department and the Department's consultants and agents and employees from and against claims, damages, losses and expenses, including but not limited to attorneys' fees, arising out of or resulting from performance of the Work, provided that such claim, damage, loss or expense is attributable to bodily injury, sickness, disease or death, or to injury to or destruction of tangible property (other than the Work itself), but only to the extent caused by the negligent acts or omissions of the Builder, a subcontractor, anyone directly or indirectly employed by them or anyone for whose acts they may be liable, regardless of whether or not such claim, damage, loss or expense is caused in part by a party indemnified hereunder.

SECTION 8 CHANGES CLAUSE

Section 8.1 **Changes Authorized.** The Department may, without invalidating the Contract, and without notice to or approval of any surety, order changes in the Work, including additions, deletions or modifications. Any such change must be conveyed by the Department to the Builder via written Change Directive or Change Order.

Section 8.2 **Executed Change Directive/Change Order Required.** Only a written Change Directive or Change Order, executed by the Department, may make changes to the Contract. In particular, but without limitation, a written Change Directive or Change Order executed by the Department is the only means by which changes may be made to the Substantial or Final Completion Date, or the Lump Sum Price.

Section 8.3 **Department-Initiated Changes.** If the Department wishes to make a change in the Work or to accelerate the Work, it will execute and issue to the Builder a written Change Directive, either directing the Builder to proceed at once with the changed Work or directing it to not to proceed, but to inform the Department, in writing, of the amount, if any, by which the Builder believes that Substantial or Final Completion Date and/or the Lump Sum Price should be adjusted to take the Change Order or Change Directive into account.

Section 8.4 **Notice of Change Event.** The Builder must give the Department written notice of any Change Event within ten (10) calendar days of the date on which the Builder knew, or reasonably should have known, of the Change Event. To the extent available, the notice must state the nature of the Change Event and describe, generally, all changes in the Contract to which the Builder believes it is entitled. Such notice is an express condition precedent to any claim or request for adjustment to the Substantial or Final Completion Date, or the Lump Sum Price arising from the Change Event and, if the notice is not given within the required time, the Builder will have waived the right to any adjustment to the Substantial or Final Completion Date or the Lump Sum Price arising from the Change Event.

Section 8.5 **Detailed Change Request.** Within twenty (20) days after giving notice of a change event, the Builder shall submit a written change request describing, in reasonable detail, all adjustments it seeks to the Substantial or Final Completion Date or the Lump Sum Price as a result of the Change Event. The change request shall include the same information as described in Section 8.3 with respect to any Contract changes the Builder seeks due to the Change Event, and the amount of any requested adjustment to the Lump Sum Price Sum shall be limited in accordance with that Subparagraph.

Section 8.6 **Markups.** For Changes to the Lump Sum Price, the following conditions shall apply:

.1 For increases in the Work which the Builder is permitted to perform by Builder's own forces, the Lump Sum Price shall be increased by the sum of: (i) the Direct Cost of the Work; and (ii) a fee (covering home office overhead, field supervision, general conditions and profit) of fifteen percent (15%) of the sum due under (i);

.2 For increases in the Work performed by Subcontractors, the Lump Sum Price shall be increased by the sum of: (i) the Direct Cost of the Work incurred by the Subcontractor for the changed Work; (ii) a fee (covering home office overhead and profit) equal to fifteen percent (15%) of the sum due under (i) above for the Subcontractor performing such Work; and (iii) a fee (covering the Builder's home office overhead, field supervision, general conditions and profit) of five percent (5%) of the sum of items (i) and (ii). Intervening tier Subcontractors shall be entitled to a mark-up of five percent (5%) (covering home office overhead, field supervision, general conditions and profit); provided, however, that in all situations and regardless of the number of tier Subcontractors involved, the maximum mark-up on the Direct Cost of the Work shall be twenty

percent (25%) and provided, further, that the Builder shall not be entitled to the markup referred to in item (iii) on changes unless such changes exceed, either individually or in the aggregate, five percent (5%) of the Lump Sum Price.

.3 When both additions and credits are involved in any one change in the Work, the Builder's Change Order and markup shall be figured on the basis of the net increase, if any.

.4 Fee will not be paid by Department for overtime or weekend work unless overtime is requested in writing and approved in writing by Department.

.5 The amount of credit to be allowed by Builder to Department for a deletion or change which results in a net decrease in the Lump Sum Price shall be the Cost avoided as confirmed by Department plus fifteen percent (15%) for profit on the deleted work.

Section 8.7 **Failure to Agree.** If the Builder claims entitlement to a change in the Contract, and the Department does not agree that any action or event has occurred to justify any change in time or compensation, or if the parties fail to agree upon the appropriate amount of the adjustment in time or compensation, the Department will unilaterally make such changes, if any, to the Contract, as it determines are appropriate pursuant to the Contract. The Builder shall proceed with the Work and the Department's directives, without interruption or delay, and shall make a claim as provided in Article 12. Failure to proceed due to a dispute over a change request shall constitute a material breach of the Contract and entitle the Department to all available remedies for such breach, including, without limitation, termination for default.

Section 8.8 **Department's Designated Representative.** The Department designates Brian J. Hanlon, Director, Department of General Services, as its representative with express authority to bind the Department with respect to all matters requiring the Department's approval or authorization; provided, however, the Department's Associate Director, Contracts & Procurement Division, shall have the express authority to bind the Department for matters that are administrative in nature or of a value no greater than One Hundred Thousand Dollars ($100,000). These representatives shall have the exclusive authority to make decisions on behalf of the Department concerning estimates and schedules, construction budgets, changes in the Work, and execution of Change Orders or Change Directives, and shall render such decisions promptly and furnish information expeditiously, so as to avoid unreasonable delay in the services or Work of the Contractor. In order for the Department to effectively manage the Project and assure that the Contractor does not receive conflicting instructions regarding the Work, the Contractor shall promptly notify the Department's representative upon receiving any instructions or other communication in connection with the Contractor's Work from any employee of the Department or other purported agent of the Department other than the Department's representative.

SECTION 9 LIQUIDATED DAMAGES

Section 9.1 If the Builder fails to achieve Substantial Completion by the Substantial Completion Date, the parties acknowledge and agree that the actual damage to the Department for the delay will be impossible to determine, and in lieu thereof, the Builder shall pay to the Department, as fixed, agreed and liquidated delay damages in the amount of set forth in the Project Information Section of this Agreement per day for each calendar day of delay for failure to meet the Substantial Completion Date. The Builder and the Department agree that the liquidated damages do not constitute, and shall not be deemed, a penalty but represent a reasonable approximation of the damages to the Department associated with a delay in the Project.

SECTION 10 INSURANCE AND BONDS

Section 10.1 The Builder will be required to maintain the following types of insurance throughout the life of the Contract. In the event that a claim for or related to the Project is made on any such policy or any other policy, the Design-Builder shall be responsible for the payment of any applicable deductible and shall not be entitled to an increase in Lump Sum for the costs of paying such deductible.

.1 Commercial general public liability insurance ("Liability Insurance") against liability for bodily injury and death and property damage, such Liability Insurance to be in an amount not less than Two Million Dollars ($2,000,000) for liability for bodily injury, death and property damage arising from any one occurrence and Two Million Dollars ($2,000,000) from the aggregate of all occurrences within each policy year. The policy should include completed operations coverage.

.2 Workers' Compensation and Employers Liability coverage providing statutory benefits for all persons employed by the Builder, or its contractors and subcontractors at or in connection with the Work.

.3 Automobile Liability, including Hired and Non-Owned Auto Liability in the amount of at least One Million Dollars ($1,000,000) for each occurrence for bodily injury and property damage.

.4 Builder's risk insurance written on an "all risk" basis and covering the value of the improvements being constructed. This coverage does not need to be maintained until such time as construction operations begin.

.5 With respect to the design team, errors and omissions coverage written on a claims-made basis and having an aggregate policy limit of at least Two Million Dollars ($2,000,000).

.6 Excess umbrella liability coverage (on at least a follow form basis) and when combined with the general liability policy has an aggregate limit of at least Three Million Dollars ($3,000,000).

Section 10.2 Each insurance policy shall be issued in the name of the Builder and shall name as additional insured parties the Department and the District of Columbia, and the officers, agents and employees of each. Such insurance shall not be cancelable or reduced without thirty (30) days prior written notice to the Department.

Section 10.3 All such insurance shall contain a waiver of subrogation against the Department and the District of Columbia, and their respective agents.

Section 10.4 All such insurance policies shall be written by a company that is rated at least A- by A.M. Best and having a surplus size rating of at least XV and is licensed/approved to do business in the District of Columbia.

Section 10.5 **Performance Bond and Payment Bond.** The Builder shall, before commencing the Construction Phase, provide to the Department a payment bond and performance bond, each with a penal sum equal to the Lump Sum Price. Such bond shall remain in full force and effect until Final Completion is achieved and the Department shall be able to draw upon such bond regardless of the amount paid by the Department to the Builder, even if such amount exceeds the penal value of such bond.

SECTION 11 ECONOMIC INCLUSION REQUIREMENTS

Section 11.1 **LSDBE Utilization.** The Builder shall comply with the requirements of the approved LSDBE Utilization Plan attached as **Exhibit C**.

Section 11.2 **First Source Employment Act.** The Builder shall comply with subchapter X of Chapter II of Title 2 of the D.C. Code, and all successor acts thereto and the rules and regulations promulgated thereunder. The Contractor and all member firms and Subcontractors shall execute a First Source Agreement with the District of Columbia Department of Employment Services ("DOES") prior to beginning Work at the Project site.

Section 11.3 **Compliance with the Apprenticeship Act.** The Builder agrees to comply with the requirements of the Apprenticeship Act of 1946, D.C. Code §§ 32-1401, *et seq*. It is understood and agreed that thirty five percent (35%) of all apprentice hours for the Project must be District residents. If the Builder or any of its subcontractors fail to use its best efforts to meet this goal, the Builder or the subcontractor shall be subject to a penalty of five percent (5%) of the labor costs associated with the Contract.

Section 11.4 **Workforce Utilization Plan.** The Builder shall comply with the requirements of the approved Workforce Utilization Plan attached as **Exhibit G**. At least thirty five percent (35%) of the percentage labor hours for the Project must be performed by District of Columbia residents (such requirement, the Workforce Utilization Requirement). If the Department determines that the Builder has achieved the Workforce Utilization Requirement, the Builder shall be entitled to an incentive payment equal to one half of one percent (½%) of the Lump Sum Price.

SECTION 12 CLAIMS & DISPUTE RESOLUTION

Section 12.1 **Notice of Claim.** If the Builder has complied with all provisions in Section 8.4 regarding changes, and the Department has denied the changes requested in a written Change Proposal, or has failed to respond to a written Change Proposal within thirty (30) days, and the Builder wishes to pursue a claim over the disputed item, or if the Builder wishes to assert a claim over a contract dispute not arising from matters related to a Change Event, Change Order or Change Directive, then the written notice of claim must be submitted to the Department pursuant to procedures set forth in section 4733 of the Department's procurement rules and section 908 of the District's Procurement Practices Reform Act of 2010 (PPRA).

Section 12.2 **Contents of Notice of Contractor's Claim.** The notice of claim shall state the nature of the claim, the events or circumstances giving rise to the claim, the type of relief requested, and the amount of time or additional compensation, or other damages sought. If the amount of time, compensation, or other damages sought is not reasonably ascertainable at the time, the Builder shall so state, explain why, and provide whatever estimates it can reasonably provide. The notice shall state clearly that the Builder intends to assert a claim against the Department.

Section 12.3 **Department's Claim.** Any claim of the Department against the Contractor shall be submitted pursuant to section 4732 of the Department's procurement rules and section 906 of the District's Procurement Practices Reform Act of 2010 (PPRA).

Section 12.4 **Appeal Procedures.** All claims arising under or in connection with the Agreement or its breach, or relating to the Project, whether framed in contract, tort or otherwise, and which are not resolved via the claims process may be resolved by filing an appeal with the District of Columbia Board of Contract Appeals in accordance with Title X of the *Procurement Practices Reform Act of 2010* (PPRA). However, if a third party brings any claim against the Department, including, without limitation, claims of infringement of patents, copyrights or other intellectual property rights, the Department may bring an action for defense or indemnification against the Contractor in the court in which such claim is being litigated.

SECTION 13 MISCELLANEOUS PROVISIONS

Section 13.1 **Extent of Contract.** The Contract, which includes this Agreement and the other documents incorporated herein by reference, represents the entire and integrated agreement between the Department and Builder and supersedes all prior negotiations representations or agreements, either written or oral. The Contract may be amended only by written instrument signed by both the Department and Builder. If anything in any document incorporated into this Agreement is inconsistent with this Agreement, this Agreement shall govern.

Section 13.2 **Ownership And Use of Documents.** The Drawings, Specifications and other documents prepared by the Builder's Architect/Engineer, and copies thereof furnished to

the Builder, are for use solely with respect to this Project. They are not to be used by the Builder, Subcontractors, Sub-subcontractors or suppliers on other projects, or for additions to this Project outside the scope of the Work, without the specific written consent of the Department and the Architect/Engineer.

Section 13.3 **Governing Law.** The Contract shall be governed by and construed in accordance with the laws of the District of Columbia, without regard to its conflict of laws principles.

Section 13.4 **Buy American Act Provision.** The Builder shall comply with the provisions of the Buy American Act (41 U.S.C. § 10a), including, but not limited to, the purchase of steel.

Section 13.5 **Davis-Bacon Act Provision.** The Builder agrees that the construction work performed under this Contract shall be subject to the Davis-Bacon Act (40 U.S.C. §§ 276a-276a-7). The wage rates applicable to this Project are attached as **Exhibit F**. The Builder further agrees that it and all of its subcontractors shall comply with the regulations implementing the Davis-Bacon Act and such regulations are hereby incorporated by reference.

Section 13.6 **False Claims Act.** Builder shall be governed by all laws and regulations prohibiting false or fraudulent statements and claims made to the government, including the prescriptions set forth in District of Columbia Code § 2-381.02.

Section 13.7 **No Third-Party Beneficiary Rights.** Nothing in this Agreement shall be construed as creating third-party beneficiary rights in any person or entity, except as otherwise expressly provided in this Agreement.

Section 13.8 **Limitations.** The Builder agrees that any statute of limitations applicable to any claim or suit by the Department arising from this Contract or its breach shall not begin to run, or shall be deemed to be tolled, until Final Completion or, with respect to latent defects or nonconformities, such later time as the Department knew or should have known of the defect or nonconformity.

Section 13.9 **Binding Effect; Assignment.** The Contract shall inure to the benefit of, and be binding upon and enforceable by, the parties and their respective successors and permitted assigns. The Builder shall not assign its rights under the Contract, including the right to all or a portion of its compensation, without the Department's prior written consent. Any delegation or assignment made contrary to the provisions of this Paragraph shall be null and void.

Section 13.10 **Survival.** All agreements warranties, and representations of the Builder contained in the Contract or in any certificate or document furnished pursuant to the Contract shall survive termination or expiration of the Contract.

Section 13.11 **No Waiver.** If the Department waives any power, right, or remedy arising from the Contract or any applicable law, the waiver shall not be deemed to be a waiver of the power, right, or remedy on the later recurrence of any similar events. No act, delay, or course of conduct by the Department shall be deemed to constitute the Department's waiver, which may be effected only by an express written waiver signed by the Department.

Section 13.12 **Remedies Cumulative.** Unless specifically provided to the contrary in the Contract, all remedies set forth in the Contract are cumulative and not exclusive of any other remedy the Department may have, including, without limitation, at law or in equity. The Department's rights and remedies will be exercised at its sole discretion, and shall not be regarded as conferring any obligation on the Department's to exercise those rights or remedies for the benefit of the Builder or any other person or entity.

Section 13.13 **Entire Agreement; Modification.** The Contract supersedes all contemporaneous or prior negotiations, representations, course of dealing, or agreements, either written or oral. No modifications to the Contract shall be effective unless made in writing signed by both the Department and the Builder, unless otherwise expressly provided to the contrary in the Contract.

Section 13.14 **Severability.** In the event any one or more of the provisions contained in this Agreement shall for any reason be held to be invalid, illegal or unenforceable in any respect, such invalidity, illegality or unenforceability shall not affect any other provision of this Agreement, and in lieu of each such invalid, illegal or unenforceable provision, there shall be added automatically as a part of this Agreement a provision as similar in terms to such invalid, illegal or unenforceable provision as may be possible and be valid, legal and enforceable; each part of this Agreement is intended to be severable.

Section 13.15 **Anti-Deficiency Act**. The Department's obligations and responsibilities under the terms of the Contract and the Contract Documents are and shall remain subject to the provisions of (i) the federal Anti-Deficiency Act, 31 U.S.C. §§1341, 1342, 1349, 1350, 1351, (ii) the D.C. Code 47-105, (iii) the District of Columbia Anti-Deficiency Act, D.C. Code §§ 47-355.01 - 355.08, as the foregoing statutes may be amended from time to time, and (iv) Section 446 of the District of Columbia Home Rule Act. Neither the Contract nor any of the Contract Documents shall constitute an indebtedness of the Department, nor shall it constitute an obligation for which the Department is obligated to levy or pledge any form of taxation, or for which the Department has levied or pledged any form of taxation. **IN ACCORDANCE WITH § 446 OF THE HOME RULE ACT, D.C. CODE § 1-204.46, NO DISTRICT OF COLUMBIA OFFICIAL IS AUTHORIZED TO OBLIGATE OR EXPEND ANY AMOUNT UNDER THE CONTRACT OR CONTRACT DOCUMENTS UNLESS SUCH AMOUNT HAS BEEN APPROVED, IS LAWFULLY AVAILABLE AND APPROPRIATED BY ACT OF CONGRESS.**

Section 13.16 **Termination for Default.** The Department may terminate the Contract for default if the Builder fails materially to perform any of its duties or obligations under the Contract. The Department must provide the Builder with written notice of its intent to terminate

the Contract under this provision seven (7) days before actually putting the termination into effect. If the Builder has begun its curative action and has made progress satisfactory to the Department within the seven days, the Department may so notify the Builder and the termination will not take effect. Otherwise, the termination shall take effect after seven days without further notice or opportunity to cure.

Section 13.17 Termination for Convenience The Department may, upon seven (7) days written notice to the Builder, terminate the Contract in whole or specified part, for its convenience, whether the Builder is in breach of Contract or not. The notice of termination shall state the effective date of termination, the extent of the termination, and any specific instructions. The Builder shall be entitled to receive only the following with respect to the terminated portion of the Project: (1) Cost of Work performed up to the date of termination; (2) reasonable costs of terminating outstanding subcontracts and supply agreements and other similar wind-up costs in a reasonable amount; (3) a fair and reasonable portion of the overhead and profit attributable to the Work performed on the terminated portion of the Project, up to the time of termination. In the event of a termination for convenience, the Builder shall not be entitled to profit on unperformed elements of the Work.

Section 13.18 Anti-Competitive Practices and Anti-Kickback Provisions.

Section 13.18.1 The Builder recognizes the need for markets to operate competitively and shall observe and shall comply with all applicable law, rules, and regulations prohibiting anti-competitive practices. The Builder shall not engage, directly or indirectly, in collusion or other anti-competitive practices that reduces or eliminates competition or restrains trade. The Department shall report to the appropriate authority any activity that evidences a violation of the antitrust laws, and take such other further action to which it is entitled or obligated under the law.

Section 13.18.2 The Builder shall observe and comply with all applicable law, rules, and regulations prohibiting kickbacks and, without limiting the foregoing, Builder shall not (i) provide or attempt to provide or offer to provide any kickback; (ii) solicit, accept, or attempt to accept any kickback; or (iii) include, directly or indirectly, the amount of any kickback in the contract price charged by Builder or a Subcontractor of the Builder to the Department. The Builder shall have in place and follow reasonable procedures designed to prevent and detect possible violations described in this subparagraph in its own operations and direct business relationships. The Department may take any recourse available to it under the law for violations of this anti-kickback provision.

Section 13.18.3 The Builder represents and warrants that it did not, directly or indirectly, engage in any collusive or other anti-competitive behavior in connection with the bid, negotiation or award of the Contract.

Section 13.19 Ethical Standards for the Department's Employees and Former Employees.

Section 13.19.1 The Department expects the Builder to observe the highest ethical

standards and to comply with all applicable law, rules, and regulations governing ethical conduct or conflicts of interest. Neither the Builder, nor any person associated with the Builder, shall provide (or seek reimbursement for) any gift, gratuity, favor, entertainment, loan or other thing of value to any employee of the District or the Department not in conformity with applicable law, rules or regulations. The Builder shall not engage the services of any person or persons in the employment of the Department or the District for any Work required, contemplated or performed under the Contract. The Builder may not assign to any former Department or District employee or agent who has joined the Builder's firm any matter on which the former employee, while in the employ of the Department, had material or substantial involvement in the matter. The Builder may request a waiver to permit the assignment of such matters to former Department personnel on a case-by-case basis. The Builder shall include in every subcontract a provision substantially similar to this section so that such provisions shall be binding upon each Subcontractor or vendor.

Section 13.20 <u>Gratuities and Officers Not To Benefit Provisions</u>.

Section 13.20.1 If it is found, after notice and hearing, by the Department that gratuities (in the form of entertainment, gifts, payment, offers of employment or otherwise) were offered or given by the Builder, or any agent or representative of the Builder, to any official, employee or agent of the Department or the District with a view toward securing the Contract or any other contract or securing favorable treatment with respect to the awarding or amending, or the making of any determinations with respect to the performance of the Contract, the Department may, by written notice to the Builder, terminate the right of the Builder to proceed under the Contract and may pursue such other rights and remedies provided by law and under the Contract.

Section 13.20.2 In the event the Contract is terminated as provided in Section 13.20.1, the Department shall be entitled:

.1 to pursue the same remedies against the Builder as it could pursue in the event of a breach of the Contract by the Builder; and

.2 as a penalty in addition to any other damages to which it may be entitled by law, to exemplary damages in an amount (as determined by the Department) which shall be not less than ten times the costs incurred by the Builder in providing any such gratuities to any such officer or employee.

Section 13.20.3 No member of, nor delegate to Congress, Mayor or City Council Member, nor officer nor employee of the District, nor officer nor employee of the Department shall be admitted to any share or part of the Contract or to any benefit that may arise therefrom, and all agreements entered into by the authorized representative of the Department in which he or any officer or employee of the Department shall be personally interested as well as all agreements made by the Department in which the Mayor or City Council Member or officer or employee of the District shall be personally interested shall be void and no payments shall be made on any such contracts by the Department or by any officer thereof; but this provision shall not be construed or extend to the agreement if the share of or benefit to the member of, or

delegate to Congress, Mayor or City Council Member, or officer or employee of the District is de minimus.

Section 13.21 <u>Covenant Against Contingent Fees Provisions</u>.

Section 13.21.1 The Builder warrants that no person or selling agency has been employed or retained to solicit or secure the Contract upon an agreement or understanding for a Commission, percentage, brokerage, or contingent fee, excepting bona fide employees or bona fide established commercial or selling agencies maintained by the Builder for the purpose of securing business. For breach or violation of this warranty, the Department shall have the right to terminate the Contract without liability or in its discretion to deduct from the contract price or consideration, or otherwise recover, the full amount of the Department, percentage, brokerage of contingent fee.

Section 13.22 <u>Conformance with Laws.</u> It shall be the responsibility of the Builder to perform the Contract in conformance with the Department's Procurement Regulations (27 DCMR § 4700 *et seq.*) and all statutes, laws, codes, ordinances, regulations, rules, requirements and orders of governmental bodies, including, without limitation, the U.S. Government and the District of Columbia government; and it is the sole responsibility of the Builder to determine the Procurement Regulations, statutes, laws, codes, ordinances, regulations, rules, requirements and orders that apply and their effect on the Builder's obligations thereunder. This Section 13.22 shall apply during both the Design and Preconstruction Phase and the Construction Phase.

Section 13.23 <u>Warranties and Representations</u>

Section 13.23.1 All disclosures, representations, warranties, and certifications the Builder makes in its proposal in response to the RFP shall remain binding and in effect throughout the term of the Contract. The Builder reaffirms that all such disclosures, representations, warranties, and certifications are true and correct.

Section 13.23.2 If any disclosure, representation, warranty or certification the Builder has made or makes pursuant to the RFP or the Contract, including, without limitation, representations concerning the Builder's construction or design experience and qualifications, claims or litigation history or financial condition, is materially inaccurate, that shall constitute a material breach of the Contract, entitling the Department to all available remedies.

Section 13.23.3 The terms and conditions of Section 13.23 shall apply during both the Preconstruction and Construction and Design Management Phases.

Section 13.24 <u>Responsibility for Agents and Contractors.</u> At all times and during both the Preconstruction and Construction Phases, the Builder shall be responsible to the Department for any and all acts and omissions of the Builder's agents, employees, Subcontractors, Sub-Subcontractors, material suppliers, and laborers, and the agents and employees of the Subcontractors, Sub-Subcontractors, material suppliers, and laborers

performing or supplying Work in connection with the Project. This Section 13.24 shall apply during both the Preconstruction and Construction Phases.

IN WITNESS WHEREOF, the parties have executed this Agreement as of the date first written above.

DEPARTMENT OF GENERAL SERVICES, an agency within the executive branch of the Government of the
District of Columbia

By: _____
Name: _____
Title: _____
Date: _____

[COMPANY NAME]

By: _____
Name: _____
Its: _____
Date: _____

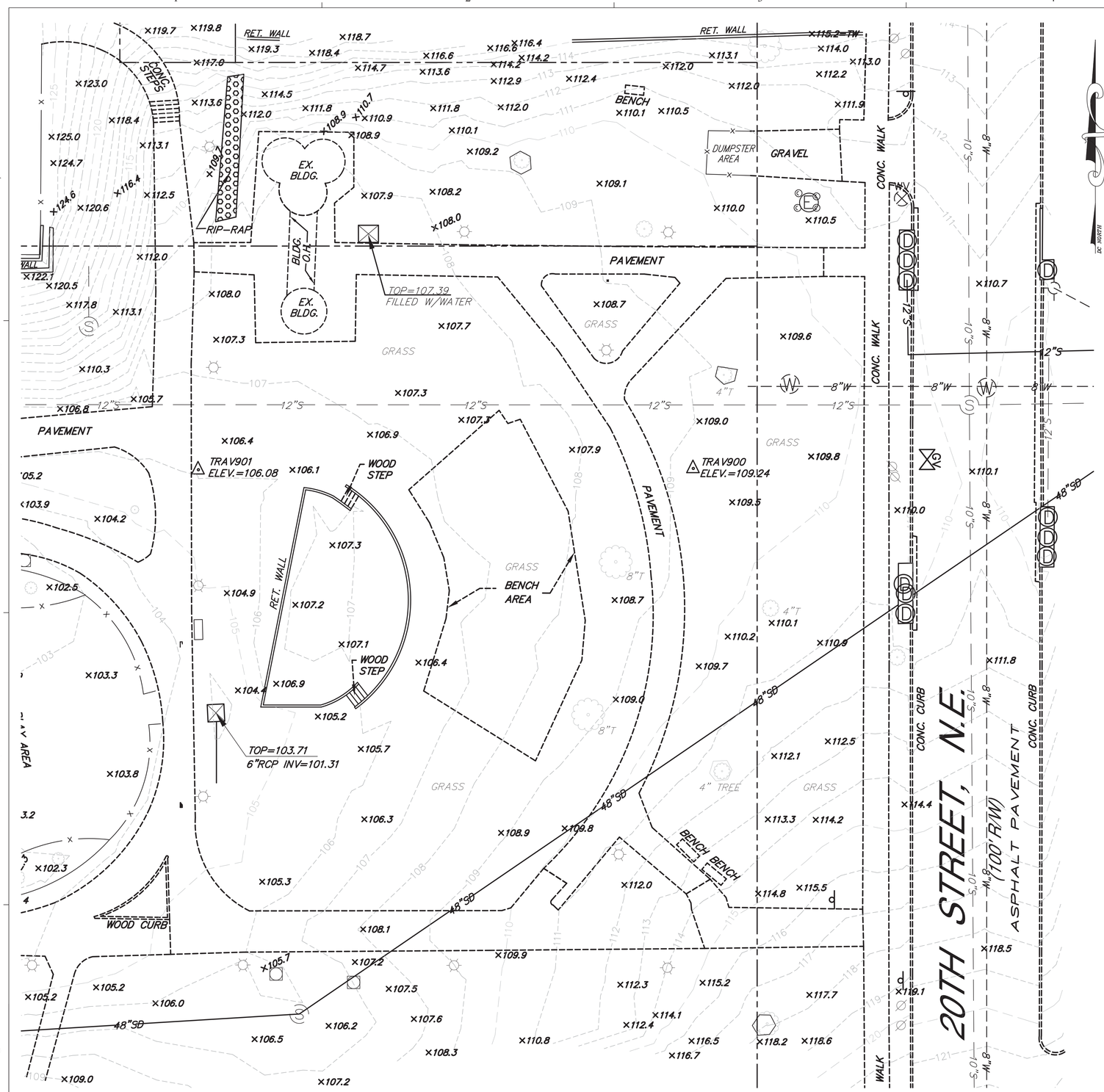

GRAPHIC SCALE

(IN FEET)
1 inch = 10 ft.

"MISS UTILITY" NOTE

CALL "MISS UTILITY" AT 1-800-257-7777, 48 HOURS PRIOR TO THE START OF WORK. THE EXCAVATOR MUST NOTIFY ALL PUBLIC UTILITY COMPANIES WITH UNDERGROUND FACILITIES IN THE AREA OF PROPOSED EXCAVATION AND HAVE THOSE FACILITIES LOCATED BY THE UTILITY COMPANIES PRIOR TO COMMENCING EXCAVATION.

LEGEND

	FIRE HYDRANT
	SEWER MANHOLE
	ELECTRIC MH
	TREE
	POWER POLE
	LIGHT POLE
	CLEAN OUT
	UNKNOWN MANHOLE
	TRAVERSE
	SIGN
	GAS VALVE
	WATER MH
	BOLLARD
×	SPOT SHOT
114	1' CONTOUR
115	INDEX CONTOUR
6"W	WATER LINES
8"S	SEWER LINES
UGG	GAS LINES
	WOOD FENCE
×	CHAIN LINK FENCE

NOTES:

BASIS OF BEARINGS:

THE MEASURED HORIZONTAL DATUM IS BASED ON DC SURVEY DATUM

VERTICAL DATUM:

VERTICAL DATUM IS BASED ON DCWASA VERTICAL DATUM.

TOPOGRAPHIC LOCATIONS:

TOPOGRAPHY AND PLANIMETRIC LOCATIONS SHOWN HEREON ARE FIELD RUN 1' CONTOUR INTERVALS BY DEETEC ENGINEERS AND SURVEYORS LLC IN MARCH 2013.

UTILITY LOCATIONS:

UTILITY LOCATIONS SHOWN HEREON ARE BASED ON FIELD OBSERVATIONS AND AVAILABLE RECORDS. THEIR LOCATIONS ARE TO BE CONSIDERED APPROXIMATE AND MUST BE VERIFIED BY THE APPROPRIATE UTILITY PROVIDER AND LOCATED BY TEST PITTING PRIOR TO ANY CONSTRUCTION OR ENGINEERING DESIGN.

NO TITLE REPORT FURNISHED.

greening urban
SUSTAINABLE SOLUTIONS

WASHINGTON DC
RICHMOND
CHARLOTTESVILLE
TELEPHONE: 804.217.7436
www.greeningurban.com

ALL DIMENSIONS SHALL BE VERIFIED IN THE FIELD BY THE CONTRACTOR. THE CONTRACTOR IS SOLELY RESPONSIBLE FOR COORDINATION OF ALL DIMENSIONS.

ENGINEER HEREBY EXPRESSES RESERVES ITS COMMON LAW COPYRIGHT AND OTHER PROPERTY RIGHTS IN THESE PLANS.

THESE PLANS AND DRAWINGS ARE NOT TO BE REPRODUCED, CHANGED OR COPIED IN ANY FORM OR MANNER WHATSOEVER, NOR ASSIGNED TO ANY THIRD PARTY, WITHOUT WRITTEN PERMISSION AND CONSENT OF GREENING URBAN, NOR ARE THEY TO BE ASSIGNED TO ANY THIRD PARTY WITHOUT FIRST OBTAINING SAID WRITTEN PERMISSION AND CONSENT.

COPYRIGHT 2010

GREENING URBAN, LLC

JOB NO. -

ISSUANCES

NO.	DESCRIPTION	DATE
1	SCHEMATIC	03-29-2013

Owner	Architect	Contractor	Surety

Chuck Brown Memorial

SCHEMATIC

03.29.13

2901 20th Street NE
Washington, DC 20018

SHEET TITLE
Existing Conditions Survey

DWG. NO.
C1.0.0

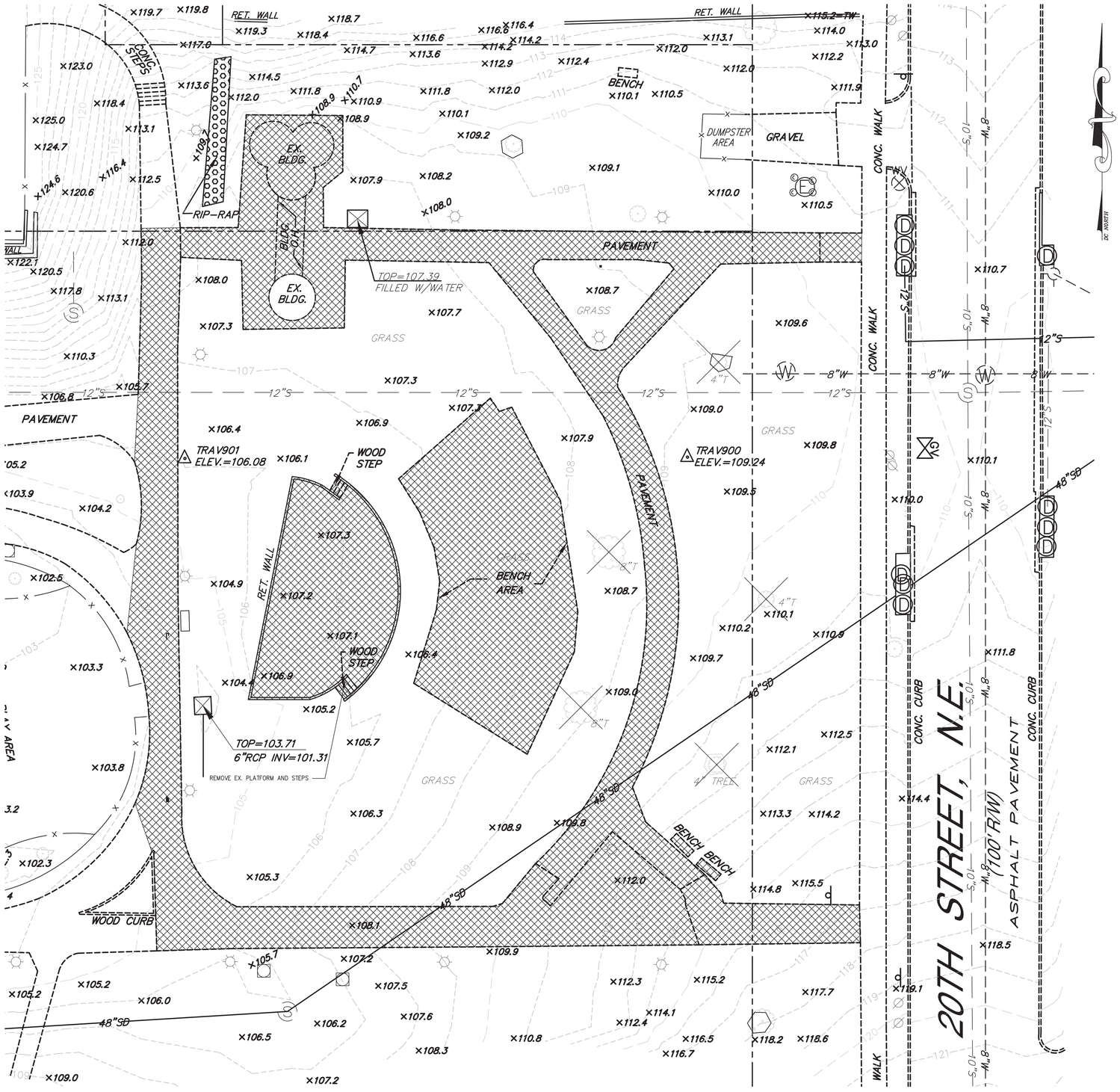

GRAPHIC SCALE

(IN FEET)
1 inch = 10 ft.

"MISS UTILITY" NOTE

CALL "MISS UTILITY" AT 1-800-257-7777, 48 HOURS PRIOR TO THE START OF WORK. THE EXCAVATOR MUST NOTIFY ALL PUBLIC UTILITY COMPANIES WITH UNDERGROUND FACILITIES IN THE AREA OF PROPOSED EXCAVATION AND HAVE THOSE FACILITIES LOCATED BY THE UTILITY COMPANIES PRIOR TO COMMENCING EXCAVATION.

greening urban
SUSTAINABLE SOLUTIONS

WASHINGTON DC
RICHMOND
CHARLOTTESVILLE
TELEPHONE: 804.217.7436
www.greeningurban.com

ALL DIMENSIONS SHALL BE VERIFIED IN THE FIELD BY THE CONTRACTOR. THE CONTRACTOR IS SOLELY RESPONSIBLE FOR COORDINATION OF ALL DIMENSIONS.

ENGINEER HEREBY EXPRESSLY RESERVES HIS COMMON LAW COPYRIGHT AND OTHER PROPERTY RIGHTS IN THESE PLANS.

THESE PLANS AND DRAWINGS ARE NOT TO BE REPRODUCED, CHANGED, OR COPIED IN ANY FORM OR MANNER WHATSOEVER, NOR ARE THEY TO BE ASSIGNED TO ANY THIRD PARTY, WITHOUT FIRST OBTAINING THE EXPRESS WRITTEN PERMISSION AND CONSENT OF GREENING URBAN, LLC. NOR ARE THEY TO BE ASSIGNED TO ANY THIRD PARTY WITHOUT FIRST OBTAINING SAID WRITTEN PERMISSION AND CONSENT.

COPYRIGHT 2010

DISTRICT OF COLUMBIA
JON A. BRAMSON
PE901570
CIVIL
PROFESSIONAL ENGINEER

GREENING URBAN, LLC

JOB NO. -

ISSUANCES

NO.	DESCRIPTION	DATE
1	SCHEMATIC	03-29-2013

Owner | Architect | Contractor | Surety

Chuck Brown Memorial

SCHEMATIC

03.29.13

2901 20th Street NE
Washington, DC 20018

SHEET TITLE
Demolition Plan

DWG. NO.
C2.0.0

FOR REFERENCE ONLY

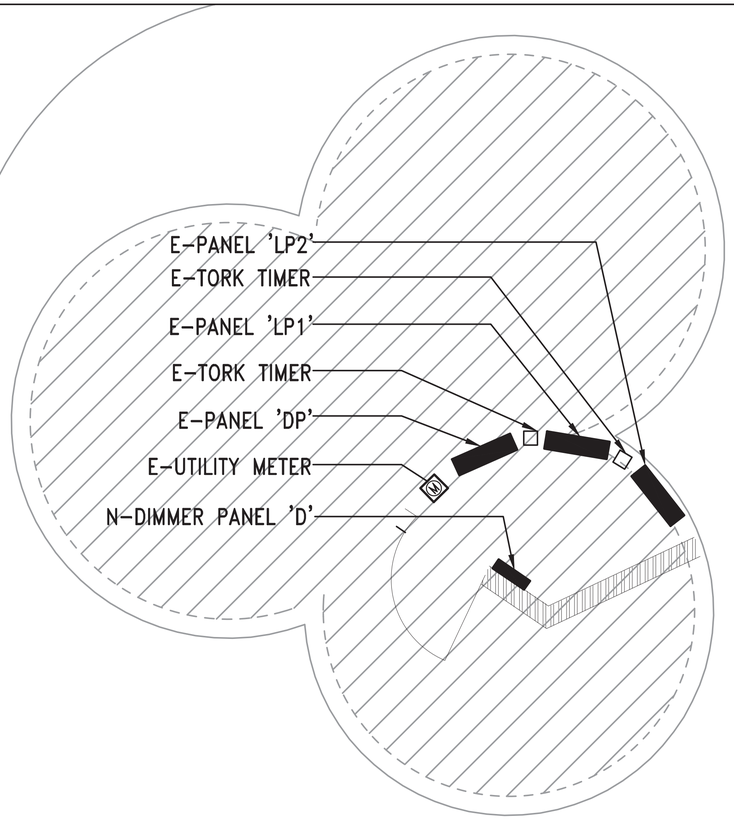

ELECTRICAL - POWER DETAIL PLAN - ELECTRIC ROOM

SCALE: 1/4"=1'-0"

ELECTRICAL LOAD CALCULATION

EXISTING SERVICE CAPACITY	=	63.0KVA
EXISTING LIGHTING LOAD (1.25% CONTINUOUS LOAD)	=	34.0KVA

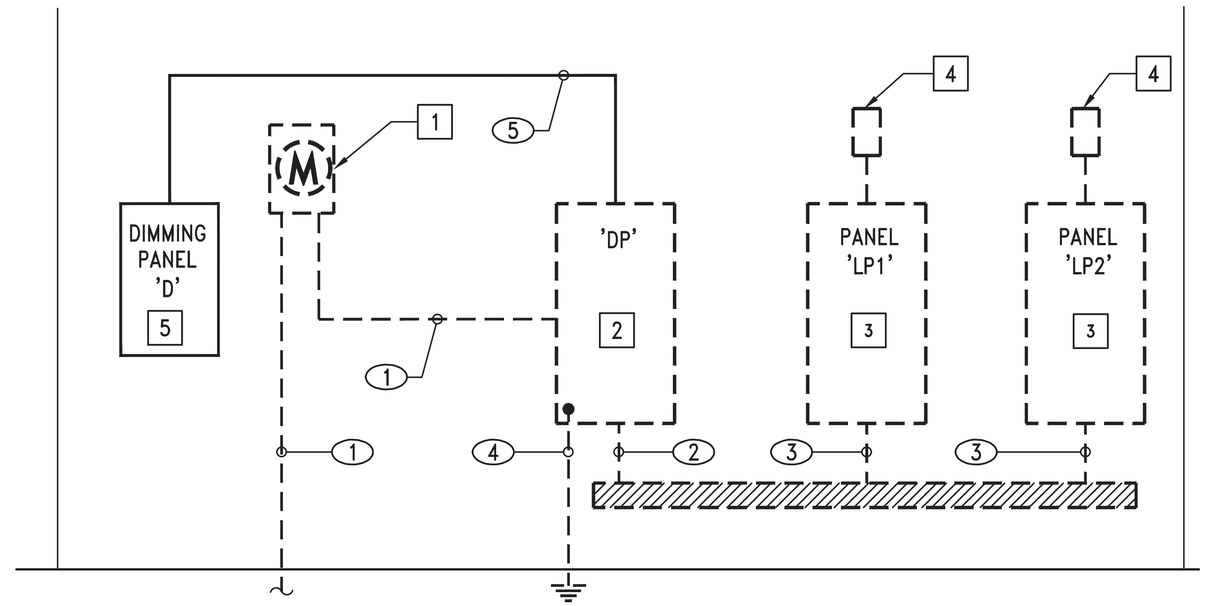

POWER RISER DIAGRAM

ALL ELECTRICAL EQUIPMENT AND FEEDERS ARE EXISTING, UNLESS OTHERWISE INDICATED.

LIGHTING LOAD SCHEDULE - PANEL 'D'

ZONE	DESCRIPTION	CIRCUIT NUMBER	VOLTAGE	FEED TYPE	LOAD TYPE	FIXTURE LOAD	NO. OF FIXTURES	WATTS	REMARKS
1	BOLLARD		120	N	MH	100	9	900	SWITCHED
2	STEP LIGHTING		120	N	LED	34	10	34	SWITCHED
3	COVE 1		120	N	LED	12W/LF	TBD	1500	DIMMED
4	COVE 2		120	N	LED	12W/LF	TBD	1500	DIMMED
5	FUTURE TRACK 1		120	N	LED	50	1	50	DIMMED
6	FUTURE TRACK 2		120	N	LED	50	1	50	DIMMED
7	FUTURE TRACK 3		120	N	LED	50	1	50	DIMMED
8	FUTURE TRACK 4		120	N	LED	50	1	50	DIMMED
9	FUTURE TRACK 5		120	N	LED	50	1	50	DIMMED
10	FUTURE TRACK 6		120	N	LED	50	2	50	DIMMED

FEEDER SCHEDULE

1	EXISTING	– 3 #2/0 + #6G IN 2"C
2	EXISTING	– 2 SETS OF 3 #6 +#8G IN 2"C
3	EXISTING	– 3 #6 + #8G IN 1"C
4	EXISTING	– #4(CU) AC GROUNDING SYSTEM
5	NEW	– 2 #12 + #12G IN 3/4"C

EQUIPMENT SCHEDULE

1	EXISTING	– UTILITY METER TRANSOCKET
2	EXISTING	– 175A, 208/120V, 3PH, 4W WITH 175A MCB DISTRIBUTION PANEL
3	EXISTING	– 125A, 208/120V, 3PH, 4W WITH 60A, 3P CONTACTOR
4	EXISTING	– TORK DIGITAL EWZ101 TIME SWITCH
5	NEW	– LUTRON DIMMING PANEL 'D' – REFER TO DIMMING SCHEDULE ON THIS SHEET

MEI PROJECT 13029.00
DESIGNED BY: DG CHECKED BY: JB
©2013 METROPOLITAN ENGINEERING, INC.

Marshall | Moya Design

Marshall Moya Design, LLC
studio@marshallmoya.com
2800 Quebec St., NW, # 1021
www.marshallmoya.com
Washington, DC 20008
P:202.537.1107 F:202.364.1998

METROPOLITAN
SHAPIRO-O'BRIEN
1150 17TH ST., NW SUITE 301 WASHINGTON, DC 2003
Tel: 202-296-2580 Fax: 202-296-194
EMAIL: mail@metropolitanengineering.com

CHUCK BROWN MEMORIAL

SHEET TITLE
Electrical
Power Detail Plan

SHEET NO.

E301A

© Marshall Moya Design 2013

FOR REFERENCE ONLY

PANEL SCHEDULE LP1 (EXISTING)

VOLTAGE: 208/120 V, 3 PHASE, 4 WIRE, 18 POLE — BUS SIZE: 60A
LOCATION: – — MAIN: 60A, 3 POLE CONTACTOR

LOAD	KVA	RATING	NO.	POLE	NO.	RATING	KVA	LOAD
EXISTING LIGHTING	0.0	20/2	1	A	2	–	–	SPACE
			3	B	4	–	–	SPACE
EXISTING LIGHTING	0.0	20/2	5	C	6	20/2	0.0	EXISTING LIGHTING
			7	A	8			
EXISTING LIGHTING	0.0	20/2	9	B	10	40/2	0.0	EXISTING LIGHTING
			11	C	12			
EXISTING LIGHTING	0.0	40/2	13	A	14	–	–	SPACE
			15	B	16	–	–	SPACE
SPACE	–	–	17	C	18	–	–	SPACE

PANEL LP1 – DEMAND LOAD CALCULATION (KVA)

NEC – ARTICLE	DEMAND FACTOR	CONNECTED LOAD	DEMAND LOAD	PANEL CAPACITY (KVA)	
				PANEL CAPACITY AT 100%	21.0
220.14(A) SPECIFIC APPLIANCES	100%	00.0	00.0	NONCONT. DUTY AT 100 % CONT. DUTY AT 125 %	00.0 00.0
220.12, 220.42 LIGHTING	100%	00.0	00.0	CONT. DUTY AT 125 %	00.0
220.14(I), 220.44 RECEPTACLES	100% (FIRST 10 KVA) 50% (OVER 10 KVA)	00.0	00.0	NONCONT. DUTY AT 100 % CONT. DUTY AT 125 %	00.0 00.0
		DEMAND LOAD	00.0	USED PANEL CAPACITY	00.0

PANEL SCHEDULE DP (EXISTING)

VOLTAGE: 208/120 V, 3 PHASE, 4 WIRE, 18 POLE — BUS SIZE: 200A
LOCATION: – — MAIN: 175A MCB

LOAD	KVA	RATING	NO.	POLE	NO.	RATING	KVA	LOAD
SPACE	–	–	1	A	2	20/1	0.0	EXISTING LOAD
SPACE	–	–	3	B	4	20/1	0.0	EXISTING LOAD
SPACE	–	–	5	C	6	20/1	0.0	EXISTING LOAD
EXISTING LOAD	0.0	20/2	7	A	8	20/1	0.0	EXISTING LOAD
			9	B	10	20/1	0.0	EXISTING LOAD
EXISTING LOAD	0.0	30/1	11	C	12	20/1	0.0	EXISTING LOAD
EXISTING PANEL 'LP1'	0.0	60/3	13	A	14	60/3	0.0	EXISTING PANEL 'LP2'
			15	B	16			
			17	C	18			

PANEL DP – DEMAND LOAD CALCULATION (KVA)

NEC – ARTICLE	DEMAND FACTOR	CONNECTED LOAD	DEMAND LOAD	PANEL CAPACITY (KVA)	
				PANEL CAPACITY AT 100%	63.0
220.14(A) SPECIFIC APPLIANCES	100%	00.0	00.0	NONCONT. DUTY AT 100 % CONT. DUTY AT 125 %	00.0 00.0
220.12, 220.42 LIGHTING	100%	00.0	00.0	CONT. DUTY AT 125 %	00.0
220.14(I), 220.44 RECEPTACLES	100% (FIRST 10 KVA) 50% (OVER 10 KVA)	00.0	00.0	NONCONT. DUTY AT 100 % CONT. DUTY AT 125 %	00.0 00.0
		DEMAND LOAD	00.0	USED PANEL CAPACITY	00.0

PANEL SCHEDULE LP2 (EXISTING)

VOLTAGE: 208/120 V, 3 PHASE, 4 WIRE, 36 POLE — BUS SIZE: 60A
LOCATION: – — MAIN: 60A, 3P CONTACTOR

LOAD	KVA	RATING	NO.	POLE	NO.	RATING	KVA	LOAD
EXISTING LIGHTING	0.0	20/2	1	A	2	–	–	SPACE
			3	B	4	40/2	0.0	EXISTING LOAD
EXISTING LIGHTING	0.0	20/2	5	C	6			
			7	A	8	–	–	SPACE
EXISTING LIGHTING	0.0	20/2	9	B	10	–	–	SPACE
			11	C	12	20/2	0.0	EXISTING LIGHTING
SPACE	–	–	13	A	14			
EXISTING LOAD	0.0	20/2	15	B	16	–	–	SPACE
			17	C	18	–	–	SPACE

PANEL LP2 – DEMAND LOAD CALCULATION (KVA)

NEC – ARTICLE	DEMAND FACTOR	CONNECTED LOAD	DEMAND LOAD	PANEL CAPACITY (KVA)	
				PANEL CAPACITY AT 100%	21.0
220.14(A) SPECIFIC APPLIANCES	100%	00.0	00.0	NONCONT. DUTY AT 100 % CONT. DUTY AT 125 %	00.0 00.0
220.12, 220.42 LIGHTING	100%	00.0	00.0	CONT. DUTY AT 125 %	00.0
220.14(I), 220.44 RECEPTACLES	100% (FIRST 10 KVA) 50% (OVER 10 KVA)	00.0	00.0	NONCONT. DUTY AT 100 % CONT. DUTY AT 125 %	00.0 00.0
		DEMAND LOAD	00.0	USED PANEL CAPACITY	00.0

MEI PROJECT 13029.00
DESIGNED BY: DG CHECKED BY: IB
©2013 METROPOLITAN ENGINEERING, INC.

Marshall | Moya Design

Marshall Moya Design, LLC
studio@marshallmoya.com
2800 Quebec St., NW, # 1021
www.marshallmoya.com
Washington, DC 20008
P:202.537.1107 F:202.364.1998

METROPOLITAN
SHAPIRO-O'BRIEN
1150 17TH ST., NW SUITE 301 WASHINGTON, DC 2003
Tel: 202-296-2580 Fax: 202-296-194
EMAIL: mail@metropolitanengineering.com

CHUCK BROWN MEMORIAL

SHEET TITLE
Electrical Panel Schedule

SHEET NO.
E301B

© Marshall Moya Design 2013