GOVERNMENT OF THE DISTRICT OF COLUMBIA
DEPARTMENT OF GENERAL SERVICES

CONSTRUCTION OF LA CASA

Solicitation No. DCAM-12-CS-0159

Addendum No. 2
Issued: May 23, 2012

This Addendum No. 2 is issued and hereby published on the DGS web site on May 23, 2012. Except as modified hereby, the Request for Proposals ("RFP") remains unmodified.

Item #1

Request for Information (RFI) responses are hereby included as Exhibit A.

Item#2

Revised Specifications dated May 23, 2012 are hereby attached as Exhibit B with supportive attachments referenced and are listed as P3-2; DU-01; M4-1; M4-2; PO-2; PO-4; P2-7; P2-B; 1109-223400; 1109-220548.

- End of Addendum No. 1 -

EXHIBIT A

DEPARTMENT OF GENERAL SERVICES

RFI RESPONSES TO OFFEROR QUESTIONS FOR THE
NEW CONSTRUCTION OF LA CASA SUPPORTIVE HOUSING FACILITY

-	**QUESTION**	**RESPONSE**
1	Reference Drawing S1.B and S2.2 Detail 1: Drawing S1.B shows underpinning at two locations. Detail 1 on drawing S2.2 indicates that the underpinning goes at the bottom of existing foundation footing. For bidding purposes, please provide the elevation of the two existing building foundations for underpinning.	The existing foundation footing elevation of the existing building to be underpinned is shown on sheet S1.B.
2	Reference Drawing C2.0 Note on drawing C2.0 indicates “Replace demolished concrete pavement per DDOT STDS and provide unit bid price for concrete pavement removal”. Please clarify if we need to remove the existing aggregate stone under the existing pavement.	See note "Remove and Replace Public Space Features…" in the same location on sheet C1.0 for clarification of demolition scope.
3	The note above mentions unit bid prices. There are no unit bid prices on the bid form. Please clarify or revise bid form. Do we put the cost for the removal and replacement of the concrete pavement in our lump sum bid price or in a unit price?	See revised bid form
4	Who is responsible for furnishing and installing the 8” waterline, the 6” fire line and the 2” domestic water line located in Irving Street? Does the Contractor pay for this work or does DC WASA pay for this work?	General Contractor, as indicated in the drawings.
5	Who is responsible for the 10” combined Storm/Sewer line and manhole located in Irving Street? Does the Contractor pay for this work or does DC WASA pay for this work?	General Contractor, as indicated in the drawings.
6	Who is responsible for the restoration of Irving Street after the utility work is completed?	General Contractor, as indicated in the drawings.

DEPARTMENT OF GENERAL SERVICES

RFI RESPONSES TO OFFEROR QUESTIONS FOR THE
NEW CONSTRUCTION OF LA CASA SUPPORTIVE HOUSING FACILITY

7	Specification 012300 “Alternates” lists three (3) alternates. However, the bid form does not have any place to put the price for the three alternates. Are there any alternates for this project? If not, are we to provide the work described as an “alternate” or the work described as “base bid” (p.012300-2)?	See revised bid form
8	Specification 012100 “Allowances” lists two allowances. Allowance 1 is for Pepco ($50,000). Allowance 2 says TBD (to be determined). What is the cost we are to carry for Allowance 2?	Provide a $50,000.00 Allowance for Pepco Fees in RFP
9	Where do the allowances go on the “Price Breakdown Form”, page B.5?	See revised bid form
10	Section L.5.1 of the RFP states that the Offeror shall list 2 similar LEED certified project while Paragraph L.5.1.2.7 states that copies of LEED certifications and scorecards for 3 "similar LEED projects be submitted. Please confirm that the requirement is for 2 projects as stated in paragraph L.5.1.	It is confirmed that the requirement is for 2 projects.
11	The RFP has the bid due on May 28, 2012. Since the bid date is Memorial Day, and given the extent of the project size and complexity, we request that the bid date be extended a minimum of two weeks.	Bid due date has been extended to May 30th via Addendum No. 01.
12	Detail 01/A4.13 shows the typical detail of the under slab drainage system. We respectfully request that the Engineer provide a layout of the system, given the routing challenges created by the building's footing system.	The District will not provide any further detailed design of the under slab drainage system then what’s already in the drawings.

DEPARTMENT OF GENERAL SERVICES

RFI RESPONSES TO OFFEROR QUESTIONS FOR THE
NEW CONSTRUCTION OF LA CASA SUPPORTIVE HOUSING FACILITY

13	Has Owner gained permission letters and/or construction easements for the installation of the underpinning and sheeting and shoring systems? Will tiebacks be allowed or will the sheeting have to be internally braced?	One permission letter has been received and one letter is pending. The Owner has no reason to believe permission will not be granted. It is expected that tiebacks will be allowed.
14	The bid form in Section B.4 of the RFP contains only a base bid price with a supplementary breakdown of the price. Specification Section 01 23 00 contains three bid alternates. Please advise as to the format in which to quote these alternates.	See revised bid form
15	Will temp street closures of Irving St be allowed for utility modifications and for a crane to erect a material hoist at the front of the building? If so, how long can the closures be?	Temporary street closures of public space shall be in accordance DDOT standards and apart of DDOT approved occupancy of public space permit secured by the contractor.
16	There are Granite Copings shown at the Terrace Level Planters on A4.10, but there are no specifications for Stonework. Please provide.	See Addendum 2 for modification of this material.
17	Will the contractor be required to pay a “Public Inconvenience Fee” for this project? This can be extremely expensive, especially since the project is 510 days.	The General Contractor is responsible for understanding the requirements for all the regulatory agencies in the District and incorporating any fees into their proposal.
18	Ref. Section 019113 “General Building Commissioning Requirements”. Who will pay the costs to hire a Commissioning Authority (CxA)?	Owner will pay Commissioning Authority (CxA)
19	There is no written specification for the LED light fixtures. The only information provided are manufacturer names and part numbers scheduled on drawing A2.8. Do you intend to issue a written specification?	Specification are attached

EXHIBIT B

REVISED SPECIFICATIONS dated MAY 23, 2012

PART 1 - GENERAL NOTES

This addendum, which includes changes to drawings and project manual sections, supercedes all previous project documents.

This document includes changes to portions of the project manual. At the end of the bid and contract negotiation period, a revised project manual incorporating all addenda will be issued to the General Contractor.

PART 2 - BID DOCUMENT ADDENDA

A. Add the following item 3.1 D to section 01 23 00 "Alternates" to the Project Manual:

D. Alternate No. 4: BIM Documentation
1. Base Bid: Delete Project Manual section
2. Alternate: All activities and deliverables per Project Manual section 01 31 10 "Coordination Drawings using BIM"

B. On sheet A4.10, change all references from "STONE COPING" to "CAST STONE COPING"

C. Add the following paragraph after Para. 1.7C in section 210500:

D. Provide personnel, equipment and materials necessary to fulfill its obligations in the commissioning process as described in section 01 91 13 " GENERAL BUILDING COMMSSIONING REQUIREMENTS".

D. Add section 220548 - VIBRATION AND SEISMIC CONTROLS FOR PLUMBING PIPING AND EQUIPMENT. See attached section.

E. Add section SECTION 223400 - FUEL-FIRED DOMESTIC WATER HEATERS. See attached section.

F. Delete Para. 1.6A and 1.6A.1 from section 224000

G. Add the following after Para. 1.7C in section 230500:

D. Provide personnel, equipment and materials necessary to fulfill its obligations in the commissioning process as described in section 01 91 13 " GENERAL BUILDING COMMSSIONING REQUIREMENTS"

H. Delete "existing" from para. 3.1I.1 in section 230519

I. Add the following subpara. After 3.1,I.2 in section 230519:

3. Inlets and outlets of plate heat exchangers, cooling tower side and condenser water side.

4. Inlets and outlets of pumps.

J. Replace "0.5 Inches" in Para 3.5, A.2 & B.2 of spec section 230548 to "0.75 Inches"

K. Add the following to end of subpara. 3.5 E. in section 23054:

F. Outdoor roof mounted Equipment: Cooling Tower as indicated and the following

1. Isolator type: Restrained spring isolator with limit-stop resistant:
2. Base type: Steel Base.
3. Minimum deflection: 2 inches.

G. Outdoor roof mounted Equipment: Base mounted pumps

1. Isolator type: Restrained spring isolator with limit-stop resistant:
2. Base type: Inertia Base.
3. Minimum deflection: 2 inches.

L. Delete "(Boilers are existing)" from para 3.11 heading in spec section 230593.

M. Add the following after Para. 3.09 in section 230593:

3.9A PROCEDURES FOR COOLING TOWERS

A. Shut off makeup water for the duration of the test, and verify that makeup and blowdown systems are fully operational after tests and before leaving the equipment. Perform the following tests and record the results:

1. Measure condenser-water flow to each cell of the cooling tower.
2. Measure entering- and leaving-water temperatures.
3. Measure wet- and dry-bulb temperatures of entering air.
4. Measure wet- and dry-bulb temperatures of leaving air.
5. Measure condenser-water flow rate recirculating through the cooling tower.
6. Measure cooling-tower spray pump discharge pressure.
7. Adjust water level and feed rate of makeup water system.
8. Measure flow through bypass.

O. Delete "EXISTING SYSTEMS" at the end of para. 3.13 heading in section 230593

P. Add the following para. After Para. 1.7B in section 230593:

B. Provide personnel, equipment and materials necessary to fulfill its obligations in the commissioning process as described in section 01 91 13 " GENERAL BUILDING COMMSSIONING REQUIREMENTS"

Q. Add the following para. After Para. 1.2B in section 230900:

C. Provide personnel, equipment and materials necessary to fulfill its obligations in the commissioning process as described in section 01 91 13 " GENERAL BUILDING COMMSSIONING REQUIREMENTS".

R. Add the following at the end of subpara. 1.2, A.5 in spec section 232113:

6. Condenser water piping.
7. Cooling tower piping.

S. Add the following after "Hot-water heating piping" in para heading 3.1, A in spec section 232113:

Condenser water piping and cooling tower piping

T. Add the following para. After Para. 1.7D in section 260500:

E. Provide personnel, equipment and materials necessary to fulfill its obligations in the commissioning process as described in section 01 91 13 " GENERAL BUILDING COMMSSIONING REQUIREMENTS".

U. Add the following para. After Para. 3.5, A.2 in section 260923:

3. Coordinate field test schedule with commissioning agent to witness all field tests. Provide personnel, equipment and materials necessary to fulfill its obligations in the commissioning process as described in section 01 91 13 " GENERAL BUILDING COMMSSIONING REQUIREMENTS".

V. Delete subpara. 1.2, A.5. "Retrofit kits for fluorescent lighting fixtures." From spec section 265100.

W. Add the following paragraphs to section 263213.1.5.A after para. 2:

3. Qualification Standard for the Electrician: The electrician firm must have a DC electrician's license. The installing firm is required to submit three projects installing electrical equipment in nature and size to this project. The electrician doing the work must have Master electrician's license or equivalent qualifications. Require the installer's foreman to have a Master electrician's license or equivalent qualifications. The other electrician's performing the

installation of the generator, related electrical equipment, and electrical runs must be licensed electricians in DC. All electricians are required to submit copies of their license and work experience on similar jobs.

4. Qualification Data: For installer and testing agency. The installer, personnel to conduct maintenance, training, starting-up the equipment and maintaining the system during the warranty and extended service, must have Generator Technician Certification (EGSA Certified)

X. Add "energy star rating" after "output" in subpara. 1.4, A.7 in spec section 265100.

Y. On sheets A2.B – A2.7, add the following to general note 9:

Security door access to be provided to residents via RFID-type key fobs. Security door access locations to include ground level stair doors, second floor lobby stair door, and elevator cab's integrated control panel. General Contractor to provide a minimum of (70) key fobs for use by owner.

Z. Add new sheet "DU.01" to the bid documents. See attached sheet.

AA. On sheet A2.8, delete the general note at the top of the light fixture schedule, and add the following note:

"Notes:

1. The fixtures listed here are the Basis of Design (BOD). Alternatives fixtures will be considered by the architect engineer team.

2. The Basis of Design includes compliance with IESNA performance requirements as noted in the following tables:

Lighting Design Criteria

Space Type	Illumination Design Target (footcandles)	Source of Target (e.g. IES Standard, Owner Requirement)	Other Lighting Design Criteria: *[e.g. CRI, CCT]*
Circulation	10	IES	CRI 80 min
Stairs	14	IES	CRI 80 min
Lobby	14	IES	CRI 90 min
Offices - general	46	IES	CRI 85 min
Living unit –task	50	IES	CRI 85 min
Living unit - general	14	IES	CRI 85 min
Living unit – passage	14	IES	CRI 85 min
Community Room	46	IES (Multipurpose Rm)	CRI 85 min

Lighting Power Design Targets

Space Type	ASHRAE 90.1-2007 Lighting Power Allowance (watts/ft^2)	Lighting Power Design Target (watts/ft^2)
Storage	0.8	0.8
Utility - Elec, Water, JC, etc	1.5	1.5
Office	1.1	1.1
Trash	0.9	0.9
Toilet (Public)	0.9	0.9
Mail Room	1.2	1.2
Corridor	0.5	0.5
Community Room	1.2	1.2
Main Lobby	1.3	1.3
Living Unit	1.1	1.1

3. Evaluation of alternates will be based on

    i. Division 1 section "Alternates"

    ii. Compliance with BOD criteria tables noted above.

    iii. All other aspects of the performance of each BOD fixture and lamp, including but not limited to NEMA ANSI and UL certifications, energy star rating, lamp technology, light distribution pattern and intensity, energy consumption, lamp color, lamp output.

4. A Special Warranty shall be provided for LED fixtures: Manufacturer's standard form in which ballast manufacturer agrees to repair or replace luminaires and lamps that fail in materials or workmanship within specified warranty period. The warranty period is two years from date of substantial completion.

BB. Note changes as revised to the following sheets. See attached.

a. M4-1

b. M4-2

c. P0-2

d. P0-4

e. P2-7

f. P2-B

g. P3-2

SECTION 220548 - VIBRATION AND SEISMIC CONTROLS FOR PLUMBING PIPING AND EQUIPMENT

PART 1 - GENERAL

1.1 RELATED DOCUMENTS

A. Drawings and general provisions of the Contract, including General and Supplementary Conditions and Division 01 Specification Sections, apply to this Section.

1.2 SUMMARY

A. This Section includes the following:

1. Isolation pads.
2. Isolation mounts.
3. Restrained elastomeric isolation mounts.
4. Freestanding and restrained spring isolators.
5. Housed spring mounts.
6. Elastomeric hangers.
7. Spring hangers.
8. Spring hangers with vertical-limit stops.
9. Pipe riser resilient supports.
10. Resilient pipe guides.
11. Seismic snubbers.
12. Restraining braces and cables.
13. Steel and inertia, vibration isolation equipment bases.

1.3 DEFINITIONS

A. IBC: International Building Code.

B. ICC-ES: ICC-Evaluation Service.

C. OSHPD: Office of Statewide Health Planning and Development for the State of California.

1.4 SUBMITTALS

A. Product Data: For the following:

1. Include rated load, rated deflection, and overload capacity for each vibration isolation device.
2. Illustrate and indicate style, material, strength, fastening provision, and finish for each type and size of seismic-restraint component used.

    a. Tabulate types and sizes of seismic restraints, complete with report numbers and rated strength in tension and shear as evaluated by an evaluation service member of ICC-ES.
    b. Annotate to indicate application of each product submitted and compliance with requirements.

3. Interlocking Snubbers: Include ratings for horizontal, vertical, and combined loads.

B. Delegated-Design Submittal: For vibration isolation and seismic-restraint details indicated to comply with performance requirements and design criteria, including analysis data signed and sealed by the qualified professional engineer responsible for their preparation.

1. Design Calculations: Calculate static and dynamic loading due to equipment weight and operation, seismic forces required to select vibration isolators, seismic restraints, and for designing vibration isolation bases.
2. Riser Supports: Include riser diagrams and calculations showing anticipated expansion and contraction at each support point, initial and final loads on building structure, spring deflection changes, and seismic loads. Include certification that riser system has been examined for excessive stress and that none will exist.
3. Vibration Isolation Base Details: Detail overall dimensions, including anchorages and attachments to structure and to supported equipment. Include auxiliary motor slides and rails, base weights, equipment static loads, power transmission, component misalignment, and cantilever loads.
4. Seismic-Restraint Details:

    a. Design Analysis: To support selection and arrangement of seismic restraints. Include calculations of combined tensile and shear loads.
    b. Details: Indicate fabrication and arrangement. Detail attachments of restraints to the restrained items and to the structure. Show attachment locations, methods, and spacings. Identify components, list their strengths, and indicate directions and values of forces transmitted to the structure

during seismic events. Indicate association with vibration isolation devices.

c. Preapproval and Evaluation Documentation: By an evaluation service member of ICC-ES, showing maximum ratings of restraint items and the basis for approval calculations.

C. Coordination Drawings: Show coordination of seismic bracing for plumbing piping and equipment with other systems and equipment in the vicinity, including other supports and seismic restraints.

D. Welding certificates.

E. Qualification Data: For professional engineer and testing agency.

F. Field quality-control test reports.

G. Operation and Maintenance Data: For air-mounting systems to include in operation and maintenance manuals.

1.5 QUALITY ASSURANCE

A. Testing Agency Qualifications: An independent agency, with the experience and capability to conduct the testing indicated, that is a nationally recognized testing laboratory (NRTL) as defined by OSHA in 29 CFR 1910.7, and that is acceptable to authorities having jurisdiction.

B. Comply with seismic-restraint requirements in the IBC unless requirements in this Section are more stringent.

C. Welding: Qualify procedures and personnel according to AWS D1.1/D1.1M, "Structural Welding Code - Steel."

D. Seismic-restraint devices shall have horizontal and vertical load testing and analysis and shall bear anchorage preapproval OPA number from OSHPD, preapproved by ICC-ES, or preapproved by another agency acceptable to authorities having jurisdiction, showing maximum seismic-restraint ratings. Ratings based on independent testing are preferred to ratings based on calculations. If preapproved ratings are not available, submittals based on independent testing are preferred. Calculations (including combining shear and tensile loads) to support seismic-restraint designs must be signed and sealed by a qualified professional engineer.

PART 2 - PRODUCTS

2.1 VIBRATION ISOLATORS

A. Available Manufacturers: Subject to compliance with requirements, manufacturers offering products that may be incorporated into the Work include, but are not limited to, the following:

1. Ace Mountings Co., Inc.
2. Amber/Booth Company, Inc.
3. California Dynamics Corporation.
4. Isolation Technology, Inc.
5. Kinetics Noise Control.
6. Mason Industries.
7. Vibration Eliminator Co., Inc.
8. Vibration Isolation.
9. Vibration Mountings & Controls, Inc.

B. Pads : Arranged in single or multiple layers of sufficient stiffness for uniform loading over pad area, molded with a nonslip pattern and galvanized-steel baseplates, and factory cut to sizes that match requirements of supported equipment.

1. Resilient Material: Oil- and water-resistant neoprene.

C. Mounts : Double-deflection type, with molded, oil-resistant rubber, hermetically sealed compressed fiberglass, or neoprene isolator elements with factory-drilled, encapsulated top plate for bolting to equipment and with baseplate for bolting to structure. Color-code or otherwise identify to indicate capacity range.

1. Materials: Cast-ductile-iron or welded steel housing containing two separate and opposing, oil-resistant rubber or neoprene elements that prevent central threaded element and attachment hardware from contacting the housing during normal operation.
2. Neoprene: Shock-absorbing materials compounded according to the standard for bridge-bearing neoprene as defined by AASHTO.

D. Restrained Mounts : All-directional mountings with seismic restraint.

1. Materials: Cast-ductile-iron or welded steel housing containing two separate and opposing, oil-resistant rubber or neoprene elements that prevent central threaded element and attachment hardware from contacting the housing during normal operation.
2. Neoprene: Shock-absorbing materials compounded according to the standard for bridge-bearing neoprene as defined by AASHTO.

E. Spring Isolators : Freestanding, laterally stable, open-spring isolators.

1. Outside Spring Diameter: Not less than 80 percent of the compressed height of the spring at rated load.
2. Minimum Additional Travel: 50 percent of the required deflection at rated load.
3. Lateral Stiffness: More than 80 percent of rated vertical stiffness.
4. Overload Capacity: Support 200 percent of rated load, fully compressed, without deformation or failure.
5. Baseplates: Factory drilled for bolting to structure and bonded to 1/4-inch- thick, rubber isolator pad attached to baseplate underside. Baseplates shall limit floor load to 500 psig.
6. Top Plate and Adjustment Bolt: Threaded top plate with adjustment bolt and cap screw to fasten and level equipment.

F. Restrained Spring Isolators : Freestanding, steel, open-spring isolators with seismic or limit-stop restraint.

1. Housing: Steel with resilient vertical-limit stops to prevent spring extension due to weight being removed; factory-drilled baseplate bonded to 1/4-inch- thick, neoprene or rubber isolator pad attached to baseplate underside; and adjustable equipment mounting and leveling bolt that acts as blocking during installation.
2. Restraint: Seismic or limit-stop as required for equipment and authorities having jurisdiction.
3. Outside Spring Diameter: Not less than 80 percent of the compressed height of the spring at rated load.
4. Minimum Additional Travel: 50 percent of the required deflection at rated load.
5. Lateral Stiffness: More than 80 percent of rated vertical stiffness.
6. Overload Capacity: Support 200 percent of rated load, fully compressed, without deformation or failure.

G. Housed Spring Mounts : Housed spring isolator with integral seismic snubbers.

1. Housing: Ductile-iron or steel housing to provide all-directional seismic restraint.
2. Base: Factory drilled for bolting to structure.
3. Snubbers: Vertically adjustable to allow a maximum of 1/4-inch travel up or down before contacting a resilient collar.

H. Elastomeric Hangers : Single or double-deflection type, fitted with molded, oil-resistant elastomeric isolator elements bonded to steel housings with threaded connections for hanger rods. Color-code or otherwise identify to indicate capacity range.

I. Spring Hangers : Combination coil-spring and elastomeric-insert hanger with spring and insert in compression.

1. Frame: Steel, fabricated for connection to threaded hanger rods and to allow for a maximum of 30 degrees of angular hanger-rod misalignment without binding or reducing isolation efficiency.
2. Outside Spring Diameter: Not less than 80 percent of the compressed height of the spring at rated load.
3. Minimum Additional Travel: 50 percent of the required deflection at rated load.
4. Lateral Stiffness: More than 80 percent of rated vertical stiffness.
5. Overload Capacity: Support 200 percent of rated load, fully compressed, without deformation or failure.
6. Elastomeric Element: Molded, oil-resistant rubber or neoprene. Steel-washer-reinforced cup to support spring and bushing projecting through bottom of frame.
7. Self-centering hanger rod cap to ensure concentricity between hanger rod and support spring coil.

J. Spring Hangers with Vertical-Limit Stop : Combination coil-spring and elastomeric-insert hanger with spring and insert in compression and with a vertical-limit stop.

1. Frame: Steel, fabricated for connection to threaded hanger rods and to allow for a maximum of 30 degrees of angular hanger-rod misalignment without binding or reducing isolation efficiency.
2. Outside Spring Diameter: Not less than 80 percent of the compressed height of the spring at rated load.
3. Minimum Additional Travel: 50 percent of the required deflection at rated load.
4. Lateral Stiffness: More than 80 percent of rated vertical stiffness.
5. Overload Capacity: Support 200 percent of rated load, fully compressed, without deformation or failure.
6. Elastomeric Element: Molded, oil-resistant rubber or neoprene.
7. Adjustable Vertical Stop: Steel washer with neoprene washer "up-stop" on lower threaded rod.
8. Self-centering hanger rod cap to ensure concentricity between hanger rod and support spring coil.

K. Pipe Riser Resilient Support : All-directional, acoustical pipe anchor consisting of 2 steel tubes separated by a minimum of 1/2-inch- thick neoprene. Include steel and neoprene vertical-limit stops arranged to prevent vertical travel in both directions. Design support for a maximum load on the isolation material of 500 psig and for equal resistance in all directions.

L. Resilient Pipe Guides: Telescopic arrangement of 2 steel tubes or post and sleeve arrangement separated by a minimum of 1/2-inch- thick neoprene. Where clearances

are not readily visible, a factory-set guide height with a shear pin to allow vertical motion due to pipe expansion and contraction shall be fitted. Shear pin shall be removable and reinsertable to allow for selection of pipe movement. Guides shall be capable of motion to meet location requirements.

2.2 VIBRATION ISOLATION EQUIPMENT BASES

A. Available Manufacturers: Subject to compliance with requirements, manufacturers offering products that may be incorporated into the Work include, but are not limited to, the following:

B. Manufacturers: Subject to compliance with requirements, provide products by one of the following:

C. Basis-of-Design Product: Subject to compliance with requirements, provide one of the following:

1. California Dynamics Corporation.
2. Isolation Technology, Inc.
3. Kinetics Noise Control.
4. Mason Industries.
5. Vibration Eliminator Co., Inc.
6. Vibration Isolation.
7. Vibration Mountings & Controls, Inc.

D. Steel Base : Factory-fabricated, welded, structural-steel bases and rails.

1. Design Requirements: Lowest possible mounting height with not less than 1-inch (25-mm) clearance above the floor. Include equipment anchor bolts and auxiliary motor slide bases or rails.

   a. Include supports for suction and discharge elbows for pumps.

2. Structural Steel: Steel shapes, plates, and bars complying with ASTM A 36/A 36M. Bases shall have shape to accommodate supported equipment.
3. Support Brackets: Factory-welded steel brackets on frame for outrigger isolation mountings and to provide for anchor bolts and equipment support.

E. Inertia Base : Factory-fabricated, welded, structural-steel bases and rails ready for placement of cast-in-place concrete.

1. Design Requirements: Lowest possible mounting height with not less than 1-inch (25-mm) clearance above the floor. Include equipment anchor bolts and auxiliary motor slide bases or rails.

   a. Include supports for suction and discharge elbows for pumps.

2. Structural Steel: Steel shapes, plates, and bars complying with ASTM A 36/A 36M. Bases shall have shape to accommodate supported equipment.
3. Support Brackets: Factory-welded steel brackets on frame for outrigger isolation mountings and to provide for anchor bolts and equipment support.
4. Fabrication: Fabricate steel templates to hold equipment anchor-bolt sleeves and anchors in place during placement of concrete. Obtain anchor-bolt templates from supported equipment manufacturer.

2.3 SEISMIC-RESTRAINT DEVICES

A. Available Manufacturers: Subject to compliance with requirements, manufacturers offering products that may be incorporated into the Work include, but are not limited to, the following:

B. Manufacturers: Subject to compliance with requirements, provide products by one of the following:

C. Basis-of-Design Product: Subject to compliance with requirements, provide or a comparable product by one of the following:
   1. California Dynamics Corporation.
   2. Cooper B-Line, Inc.; a division of Cooper Industries.
   3. Hilti, Inc.
   4. Kinetics Noise Control.
   5. Loos & Co.; Cableware Division.
   6. Mason Industries.
   7. TOLCO Incorporated; a brand of NIBCO INC.
   8. Unistrut; Tyco International, Ltd.

D. General Requirements for Restraint Components: Rated strengths, features, and applications shall be as defined in reports by an evaluation service member of ICC-ES.

   1. Structural Safety Factor: Allowable strength in tension, shear, and pullout force of components shall be at least four times the maximum seismic forces to which they will be subjected.

E. Snubbers: Factory fabricated using welded structural-steel shapes and plates, anchor bolts, and replaceable resilient isolation washers and bushings.

1. Anchor bolts for attaching to concrete shall be seismic-rated, drill-in, and stud-wedge or female-wedge type.
2. Resilient Isolation Washers and Bushings: Oil- and water-resistant neoprene.
3. Maximum 1/4-inch air gap, and minimum 1/4-inch- thick resilient cushion.

F. Channel Support System: MFMA-3, shop- or field-fabricated support assembly made of slotted steel channels with accessories for attachment to braced component at one end and to building structure at the other end and other matching components and with corrosion-resistant coating; and rated in tension, compression, and torsion forces.

G. Restraint Cables: ASTM A 603 galvanized-steel cables with end connections made of steel assemblies with thimbles, brackets, swivel, and bolts designed for restraining cable service; and with a minimum of two clamping bolts for cable engagement.

H. Hanger Rod Stiffener: Steel tube or steel slotted-support-system sleeve with internally bolted connections or Reinforcing steel angle clamped to hanger rod.

I. Bushings for Floor-Mounted Equipment Anchor Bolts: Neoprene bushings designed for rigid equipment mountings, and matched to type and size of anchor bolts and studs.

J. Bushing Assemblies for Wall-Mounted Equipment Anchorage: Assemblies of neoprene elements and steel sleeves designed for rigid equipment mountings, and matched to type and size of attachment devices used.

K. Resilient Isolation Washers and Bushings: One-piece, molded, oil- and water-resistant neoprene, with a flat washer face.

L. Mechanical Anchor Bolts: Drilled-in and stud-wedge or female-wedge type in zinc-coated steel for interior applications and stainless steel for exterior applications. Select anchor bolts with strength required for anchor and as tested according to ASTM E 488. Minimum length of eight times diameter.

M. Adhesive Anchor Bolts: Drilled-in and capsule anchor system containing polyvinyl or urethane methacrylate-based resin and accelerator, or injected polymer or hybrid mortar adhesive. Provide anchor bolts and hardware with zinc-coated steel for interior applications and stainless steel for exterior applications. Select anchor bolts with strength required for anchor and as tested according to ASTM E 488.

2.4 FACTORY FINISHES

A. Finish: Manufacturer's standard prime-coat finish ready for field painting.

B. Finish: Manufacturer's standard paint applied to factory-assembled and -tested equipment before shipping.

1. Powder coating on springs and housings.
2. All hardware shall be galvanized. Hot-dip galvanize metal components for exterior use.
3. Baked enamel or powder coat for metal components on isolators for interior use.
4. Color-code or otherwise mark vibration isolation and seismic-control devices to indicate capacity range.

PART 3 - EXECUTION

3.1 EXAMINATION

A. Examine areas and equipment to receive vibration isolation and seismic-control devices for compliance with requirements for installation tolerances and other conditions affecting performance.

B. Examine roughing-in of reinforcement and cast-in-place anchors to verify actual locations before installation.

C. Proceed with installation only after unsatisfactory conditions have been corrected.

3.2 APPLICATIONS

A. Multiple Pipe Supports: Secure pipes to trapeze member with clamps approved for application by an evaluation service member of ICC-ES.

B. Hanger Rod Stiffeners: Install hanger rod stiffeners where indicated or scheduled on Drawings to receive them and where required to prevent buckling of hanger rods due to seismic forces.

C. Strength of Support and Seismic-Restraint Assemblies: Where not indicated, select sizes of components so strength will be adequate to carry present and future static and seismic loads within specified loading limits.

3.3 VIBRATION-CONTROL AND SEISMIC-RESTRAINT DEVICE INSTALLATION

A. Equipment Restraints:

1. Install seismic snubbers on plumbing equipment mounted on vibration isolators. Locate snubbers as close as possible to vibration isolators and bolt to equipment base and supporting structure.
2. Install resilient bolt isolation washers on equipment anchor bolts where clearance between anchor and adjacent surface exceeds 0.125 inches.
3. Install seismic-restraint devices using methods approved by an evaluation service member of ICC-ES providing required submittals for component.

B. Piping Restraints:

1. Comply with requirements in MSS SP-127.
2. Space lateral supports a maximum of 40 feet o.c., and longitudinal supports a maximum of 80 feet o.c.
3. Brace a change of direction longer than 12 feet.

C. Install cables so they do not bend across edges of adjacent equipment or building structure.

D. Install seismic-restraint devices using methods approved by an evaluation service member of ICC-ES providing required submittals for component.

E. Install bushing assemblies for anchor bolts for floor-mounted equipment, arranged to provide resilient media between anchor bolt and mounting hole in concrete base.

F. Install bushing assemblies for mounting bolts for wall-mounted equipment, arranged to provide resilient media where equipment or equipment-mounting channels are attached to wall.

G. Attachment to Structure: If specific attachment is not indicated, anchor bracing to structure at flanges of beams, at upper truss chords of bar joists, or at concrete members.

H. Drilled-in Anchors:

1. Identify position of reinforcing steel and other embedded items prior to drilling holes for anchors. Do not damage existing reinforcing or embedded items during coring or drilling. Notify the structural engineer if reinforcing steel or other embedded items are encountered during drilling. Locate and avoid prestressed tendons, electrical and telecommunications conduit, and gas lines.
2. Do not drill holes in concrete or masonry until concrete, mortar, or grout has achieved full design strength.
3. Wedge Anchors: Protect threads from damage during anchor installation. Heavy-duty sleeve anchors shall be installed with sleeve fully engaged in the structural element to which anchor is to be fastened.

4. Adhesive Anchors: Clean holes to remove loose material and drilling dust prior to installation of adhesive. Place adhesive in holes proceeding from the bottom of the hole and progressing toward the surface in such a manner as to avoid introduction of air pockets in the adhesive.
5. Set anchors to manufacturer's recommended torque, using a torque wrench.
6. Install zinc-coated steel anchors for interior and stainless steel anchors for exterior applications.

3.4 ACCOMMODATION OF DIFFERENTIAL SEISMIC MOTION

A. Install flexible connections in piping where they cross seismic joints, where adjacent sections or branches are supported by different structural elements, and where the connections terminate with connection to equipment that is anchored to a different structural element from the one supporting the connections as they approach equipment. Comply with requirements in Division 22 Section "Domestic Water Piping" for piping flexible connections.

3.5 FIELD QUALITY CONTROL

A. Testing Agency: Engage a qualified testing agency to perform tests and inspections.

B. Perform tests and inspections.

C. Tests and Inspections:

1. Provide evidence of recent calibration of test equipment by a testing agency acceptable to authorities having jurisdiction.
2. Schedule test with Owner, through Architect, before connecting anchorage device to restrained component (unless postconnection testing has been approved), and with at least seven days' advance notice.
3. Obtain Architect's approval before transmitting test loads to structure. Provide temporary load-spreading members.
4. Test at least four of each type and size of installed anchors and fasteners selected by Architect.
5. Test to 90 percent of rated proof load of device.
6. Measure isolator restraint clearance.
7. Measure isolator deflection.
8. Verify snubber minimum clearances.
9. Air-Mounting System Leak Test: After installation, charge system and test for leaks. Repair leaks and retest until no leaks exist.
10. Air-Mounting System Operational Test: Test the compressed-air leveling system.
11. Test and adjust air-mounting system controls and safeties.

12. If a device fails test, modify all installations of same type and retest until satisfactory results are achieved.

D. Remove and replace malfunctioning units and retest as specified above.

E. Prepare test and inspection reports.

3.6 ADJUSTING

A. Adjust isolators after piping system is at operating weight.

B. Adjust limit stops on restrained spring isolators to mount equipment at normal operating height. After equipment installation is complete, adjust limit stops so they are out of contact during normal operation.

C. Adjust active height of sprint isolators.

D. Adjust restraints to permit free movement of equipment within normal mode of operation.

3.7 PLUMBING VIBRATION-CONTROL AND SEISMIC-RESTRAINT DEVICE SCHEDULE

A. Indoors, Suspended Equipment: Circulating pumps.

1. Isolator Type: Spring isolators.
2. Minimum Deflection: 0.5 Inches.
3. Seismic Restraint Required: No.

B. Indoors, Floor Mounted Equipment: Domestic Water Heaters and Storage Tank.

1. Pads:
   a. Material: Neoprene
   b. Thickness: 0.75 inches thick.
   c. Seismic Restraint Required: Yes.

C. Indoors, Floor Mounted Equipment: Packaged booster pump.

1. Isolator Type: Spring isolators.
2. Base Type: Inertial Base.
3. Minimum Deflection: 2 Inches.
4. Seismic Restraint Required: Yes.

END OF SECTION 220548

PART 1 GENERAL

1.01 SUMMARY

A. Section includes: Screen panels and accessories.

B. Related Sections:

Section 32 93 00: Plants.

1.02 REFERENCES:

A. ASTM A500 – Cold-Formed Welded and Seamless Carbon Steel Structural Tubing in Rounds and Shapes.

B. ASTM A82 – Mechanical, Physical and Performance Properties of Carbon Steel Wire

C. ASTM A641 – Zinc-Coated (Galvanized) Carbon Steel Wire

D. ASTM A879 – Steel Sheet, Zinc Coated by the Electrolytic Process for Applications Requiring Designation of the Coating Mass on Each Surface.

E. ASTM B117 – Operating Salt Spray (Fog) Apparatus.

F. RAL – German Institute for Quality Assurance and Indication.

1.03 SUBMITTALS

A. Submittals shall be in accordance with Division 1.

B. Product Data: Submit manufacturer's product data, standard details, and installation instructions.

C. Shop Drawings: Submit showing sizes critical dimensions, panel layout constraints using a 2 x 2 inch modular grid, and details and locations of accessories.

D. Color Submittals: Submit coupons 2 x 3/12 inches minimum showing color and texture to be provided.

1.04 QUALITY ASSURANCE

A. Manufacturer: Minimum 5 years experience manufacturing and supplying trellis structures of the type required for this project.

1.05 DELIVERY, STORAGE, AND HANDLING

A. Protect materials from damage. Store panels flat. Provide edge protection when strapping is used. Do not apply loads to panel edges.

1.06 ENVIRONMENTAL REQUIREMENTS

A. Recycled Materials Content: Steel components shall contain not less than [90] percent recycled materials content.

PART 2 PRODUCTS

2.01 MANUFACTURER

A. The basis of design for the Screening Devices in the project is a product provided by GREENscreen, Los Angeles, CA; phone 800-450-3494, fax 310-837-0523, www.greenscreen.com.

2.02 PANELS

A. Panels shall be rigid, three-dimensional welded wire grid fabricated of 14-gage ASTM A641 galvanized steel wire.

B. Face Grid: Wires shall be welded at each intersection to form a 2 x 2 inch face grid on the front and back of panels,

C. Trusses: Face grids shall be separated by bent wire trusses spaced at 2-inch centers and welded to front and back face grids at each truss apex.

D. Thickness: As shown on Drawings.

E. Length and Width: Provide in 2-inch nominal increments as shown in the drawings.

F. Tolerance: 1/8 inch in width and ¼ inch in length.

2.03 ACCESSORIES

B. Clips and Straps: Provide manufacturer's standard types of clips and straps suitable for mounting conditions. Fabricate from ASTM A879 galvanized steel.

Adjustable clips shall have ¼ inch diameter 18-8 stainless steel bolt, washer, and nut.

D. Fence Posts: 3-inch [diameter ASTM A500] steel tube. Provide steel post caps.

E. Fasteners for Mounting Clips to Fence Posts: Self drilling, self tapping hex washer head screws, Type 410 stainless steel, and free from rust when salt spray tested for 300 hours in accordance with ASTM B117.

F. Fasteners for Attachment to Structure:

1. To Concrete or Masonry: [550 lbs].
2. To Structural Steel: [550 lbs].
3. To light-Gage Steel Framing: [550 lbs].
4. To Wood Framing: [550 lbs].

2.04 FABRICATION

A. Cut to size.

[B. Weld trim to panels and grind smooth exterior surfaces of welds.]

[C. Curve Panels using either "crimp-to-curve" or "cut-to-curve" technique as recommended by manufacturer for diameter of curve and conditions of use.]

2.05 FINISHES

A. Metal components (except fasteners) shall be factory finished after fabrication.

B. Finish System: pretreat with general purpose, alkaline, water based cleaner / degreaser applied at 240 degrees F. prime with zinc-rich epoxy powder coat. Topcoat with polyester or polyester-urethane powder coat.

C. Salt Spray Resistance: Finish shall remain rust free when tested 1680 hours in accordance with ASTM B117.

D. Color: Gloss Black.

E. Touch-Up Paint: Provide high quality, exterior-grade spray paint suitable for conditions of use.

PART 3 EXECUTION

3.01 EXAMINATION

A. Inspect substrates and conditions affecting work of Section. Do not proceed until unsatisfactory conditions have been corrected.

3.02 PREPARATION

A. Fence Posts: Install posts as shown on Drawing.

3.03 INSTALLATION

A. Install panels plumb and square, centered within area designated for panels, and aligned to maintain modular grid.

B. Avoid cutting panels in field. Where field cutting is essential, apply touch-up paint to cut edges.

C. Install securely with fasteners located [as shown on Drawings.] [To meet manufacturer's requirements.]

D. Repair bent or damaged panels. If panels cannot be repaired to satisfaction of [Architect] , remove from jobsite and replace with new panels.

END OF SECTION 33 35 00

SECTION 223400 - FUEL-FIRED DOMESTIC WATER HEATERS

PART 1 - GENERAL

1.1 RELATED DOCUMENTS

A. Drawings and general provisions of the Contract, including General and Supplementary Conditions and Division 01 Specification Sections, apply to this Section.

1.2 SUMMARY

A. This Section includes the following fuel-fired water heaters:

1. Commercial, high-efficiency, gas water heaters.
2. Compression tanks.
3. Water heater accessories.

1.3 DEFINITIONS

A. LP Gas: Liquefied-petroleum fuel gas.

1.4 SUBMITTALS

A. Product Data: For each type and size of water heater indicated. Include rated capacities, operating characteristics, furnished specialties, and accessories.

B. LEED Submittal:

1. Product Data for Prerequisite EA 2: Documentation indicating that units comply with ASHRAE/IESNA 90.1-2004, Section 7 - "Service Water Heating."

C. Shop Drawings: Diagram power, signal, and control wiring.

D. Product Certificates: For each type of commercial water heater, signed by product manufacturer.

E. Manufacturer Seismic Qualification Certification: Submit certification that commercial water heaters, accessories, and components will withstand seismic forces defined in Division 22 Section "Vibration and Seismic Controls for Plumbing Piping and Equipment." Include the following:

1. Basis for Certification: Indicate whether withstand certification is based on actual test of assembled components or on calculation.

    a. The term "withstand" means "the unit will remain in place without separation of any parts from the device when subjected to the seismic forces specified."
    b. The term "withstand" means "the unit will remain in place without separation of any parts from the device when subjected to the seismic forces specified and the unit will be fully operational after the seismic event."

2. Dimensioned Outline Drawings of Equipment Unit: Identify center of gravity and locate and describe mounting and anchorage provisions.
3. Detailed description of equipment anchorage devices on which the certification is based and their installation requirements.

F. Source quality-control test reports.

G. Field quality-control test reports.

H. Operation and Maintenance Data: For water heaters to include in emergency, operation, and maintenance manuals.

I. Warranty: Special warranty specified in this Section.

1.5 QUALITY ASSURANCE

A. Source Limitations: Obtain same type of water heaters through one source from a single manufacturer.

B. Product Options: Drawings indicate size, profiles, and dimensional requirements of water heaters and are based on the specific system indicated. Refer to Division 01 Section "Product Requirements."

C. Electrical Components, Devices, and Accessories: Listed and labeled as defined in NFPA 70, Article 100, by a testing agency acceptable to authorities having jurisdiction, and marked for intended use.

D. ASHRAE/IESNA 90.1-2007 Compliance: Applicable requirements in ASHRAE/IESNA 90.1-2007.

E. ASME Compliance:

1. Where ASME-code construction is indicated, fabricate and label commercial water heater storage tanks to comply with ASME Boiler and Pressure Vessel Code: Section VIII, Division 1.
2. Where ASME-code construction is indicated, fabricate and label commercial, finned-tube water heaters to comply with ASME Boiler and Pressure Vessel Code: Section IV.

F. Comply with NSF 61, "Drinking Water System Components - Health Effects; Sections 1 through 9" for all components that will be in contact with potable water.

1.6 COORDINATION

A. Coordinate size and location of concrete bases with Architectural and Structural Drawings.

1.7 WARRANTY

A. Special Warranty: Manufacturer's standard form in which manufacturer agrees to repair or replace components of fuel-fired water heaters that fail in materials or workmanship within specified warranty period.

1. Failures include, but are not limited to, the following:

   a. Structural failures including storage tank and supports.
   b. Faulty operation of controls.
   c. Deterioration of metals, metal finishes, and other materials beyond normal use.

2. Warranty Period(s): From date of Substantial Completion:

   a. Commercial, Gas Water Heaters:

      1) Storage Tank: Five years.
      2) Controls and Other Components: Five years.

   b. Compression Tanks: One year.

PART 2 - PRODUCTS

2.1 MANUFACTURERS

A. In other Part 2 articles where titles below introduce lists, the following requirements apply to product selection:

1. Manufacturers: Subject to compliance with requirements, provide products by one of the manufacturers specified.

2.2 COMMERCIAL, GAS WATER HEATERS

A. Commercial, High-Efficiency, Gas Water Heaters: Comply with ANSI Z21.10.3/CSA 4.3.

1. Available Manufacturers:

a. AERCO International.
b. Bradford White Corporation.
c. Lochinvar Corporation.
d. Patterson-Kelley.
e. Rheem Water Heater Div.; Rheem Manufacturing Company.
f. Ruud Water Heater Div.; Rheem Manufacturing Company.
g. Smith, A. O. Water Products Company.
h. State Industries, Inc.

2. Description: Manufacturer's proprietary design to provide at least 95 percent combustion efficiency at optimum operating conditions. Unit shall be certified and listed by C.S.A. International under the latest edition of the harmonized ANSI Z21.10.3 test standard for the US. Boiler shall be complete with all controls and accessories for stand-alone control and building management system control of modulation or set-point and enable/disable of water heater, and a 0-10VDC output of water heater modulation rate.
3. Storage-Tank Construction: ASME-code steel with 150-psig minimum working-pressure rating.

a. Tappings: Factory fabricated of materials compatible with tank. Attach tappings to tank before testing.

1) NPS 2 and Smaller: Threaded ends according to ASME B1.20.1.
2) NPS 2-1/2 and Larger: Flanged ends according to ASME B16.5 for steel and stainless-steel flanges, and according to ASME B16.24 for copper and copper-alloy flanges.

b. Interior Finish: Comply with NSF 61 barrier materials for potable-water tank linings, including extending finish into and through tank fittings and outlets.
c. Lining: Glass complying with NSF 61 barrier materials for potable-water tank linings, including extending lining into and through tank fittings and outlets.

4. Factory-Installed, Storage-Tank Appurtenances:

a. Anode Rod: Replaceable magnesium.
b. Drain Valve: Corrosion-resistant metal complying with ASSE 1005.
c. Insulation: Comply with ASHRAE/IESNA 90.1. Surround entire storage tank except connections and controls. 2 inch thick, high density polyurethane foam insulation.
d. Jacket: Steel with enameled finish.
e. Combination Temperature and Pressure Relief Valves: ANSI Z21.22/CSA 4.4. Include one or more relief valves with total relieving capacity at least as great as heat input, and include pressure setting less than water heater working-pressure rating. Select one relief valve with sensing element that extends into storage tank.

5. Burner or Heat Exchanger: Comply with UL 795 or approved testing agency requirements for high-efficiency water heaters and for natural-gas fuel. Constructed of high temperature stainless steel with a woven metal fiber outer covering to provide modulating firing rates.
6. Capacity modulation: Full modulation firing down to 20% of rated input with a turn down ratio of 5:1.
7. Temperature Control: Adjustable thermostat.
8. Safety Controls: Automatic, high-temperature-limit and low-water cutoff devices or systems.
9. Controls: 24 VAC control circuit and components shall have electrocinc display for water heater set-up, water heater status, and water heater diagnostics.
10. Building Automation System Interface: Normally closed dry contacts for enabling and disabling water heater.
11. Vent and combustion air intake: Stainless steel sealed vent material per manufacturer for vent and combustion air intake.
12. Capacity and Characteristics: As indicated.

2.3 COMPRESSION TANKS

A. Description: Steel, pressure-rated tank constructed with welded joints and factory-installed, butyl-rubber diaphragm. Include air precharge to minimum system-operating pressure at tank.

1. [Available]Manufacturers:

   a. AMTROL Inc.
   b. Armstrong Pumps, Inc.
   c. Smith, A. O.; Aqua-Air Div.
   d. State Industries, Inc.
   e. Taco, Inc.
   f. Watts Regulator Co.

2. Construction:

   a. Tappings: Factory-fabricated steel, welded to tank before testing and labeling. Include ASME B1.20.1 pipe thread.
   b. Interior Finish: Comply with NSF 61 barrier materials for potable-water tank linings, including extending finish into and through tank fittings and outlets.
   c. Air-Charging Valve: Factory installed.

3. Capacity and Characteristics:

   a. Working-Pressure Rating: 100 psig.
   b. Capacity Acceptable: As indicated.
   c. Air Precharge Pressure: Building height.

2.4 WATER HEATER ACCESSORIES

A. Gas Shutoff Valves: ANSI Z21.15/CGA 9.1, manually operated. Furnish for installation in piping.

B. Gas Pressure Regulators: ANSI Z21.18, appliance type. Include pressure rating, capacity, and pressure differential required between gas supply and water heater.

C. Gas Automatic Valves: ANSI Z21.21, appliance, electrically operated, on-off automatic valve.

D. Combination Temperature and Pressure Relief Valves: Include relieving capacity at least as great as heat input, and include pressure setting less than water heater working-pressure rating. Select each relief valve with sensing element that extends into storage tank.

   1. Gas Water Heaters: ANSI Z21.22/CSA 4.4.
   2. Oil-Fired Water Heaters: ASME rated and stamped and complying with ASME PTC 25.3.

E. Pressure Relief Valves: Include pressure setting less than working-pressure rating of water heater.

1. Gas Water Heaters: ANSI Z21.22/CSA 4.4.

F. Piping Manifold Kits: Water heater manufacturer's factory-fabricated inlet and outlet piping arrangement for multiple-unit installation. Include piping and valves for field assembly that is capable of isolating each water heater and of providing balanced flow through each water heater.

G. Piping-Type Heat Traps: Field-fabricated piping arrangement according to ASHRAE/IESNA 90.1-2007.

2.5 SOURCE QUALITY CONTROL

A. Test and inspect water heater storage tanks, specified to be ASME-code construction, according to ASME Boiler and Pressure Vessel Code.

B. Hydrostatically test water heater storage tanks before shipment to minimum of one and one-half times pressure rating.

C. Prepare test reports.

PART 3 - EXECUTION

3.1 WATER HEATER INSTALLATION

A. Install commercial water heaters on concrete bases.

1. Exception: Omit concrete bases for commercial water heaters if installation on stand, bracket, suspended platform, or direct on floor is indicated.
2. Concrete base construction requirements are specified in Division 22 Section "Common Work Results for Plumbing."

B. Install water heaters level and plumb, according to layout drawings, original design, and referenced standards. Maintain manufacturer's recommended clearances. Arrange units so controls and devices needing service are accessible.

C. Install seismic restraints for commercial water heaters. Anchor to substrate.

D. Install gas water heaters according to NFPA 54.

E. Install gas shutoff valves on gas supplies to gas water heaters without shutoff valves.

F. Install gas pressure regulators on gas supplies to gas water heaters without gas pressure regulators if gas pressure regulators are required to reduce gas pressure at burner.

G. Install automatic gas valves on gas supplies to gas water heaters, if required for operation of safety control.

H. Install combination temperature and pressure relief valves in top portion of storage tanks. Use relief valves with sensing elements that extend into tanks. Extend commercial-water-heater, relief-valve outlet, with drain piping same as domestic water piping in continuous downward pitch, and discharge by positive air gap onto closest floor drain.

I. Install thermometer on outlet piping of water heaters. Refer to Division 22 Section "Meters and Gages for Plumbing Piping" for thermometers.

J. Install pressure gage(s) on inlet and outlet piping of commercial, fuel-fired water heater piping. Refer to Division 22 Section "Meters and Gages for Plumbing Piping" for pressure gages.

K. Assemble and install inlet and outlet piping manifold kits for multiple water heaters. Fabricate, modify, or arrange manifolds for balanced water flow through each water heater. Include shutoff valve and thermometer in each water heater inlet and outlet, and throttling valve in each water heater outlet. Refer to Division 22 Section "General-Duty Valves for Plumbing Piping" for general-duty valves and to Division 22 Section "Meters and Gages for Plumbing Piping" for thermometers.

L. Install piping-type heat traps on inlet and outlet piping of water heater storage tanks without integral or fitting-type heat traps.

M. Fill water heaters with water.

N. Charge compression tanks with air.

3.2 CONNECTIONS

A. Piping installation requirements are specified in other Division 22 Sections. Drawings indicate general arrangement of piping, fittings, and specialties.

B. Install piping adjacent to water heaters to allow service and maintenance. Arrange piping for easy removal of water heaters.

C. Ground equipment according to Division 26 Section "Grounding and Bonding for Electrical Systems."

D. Connect wiring according to Division 26 Section "Low-Voltage Electrical Power Conductors and Cables."

3.3 FIELD QUALITY CONTROL

A. Manufacturer's Field Service: Engage a factory-authorized service representative to inspect, test, and adjust field-assembled components and equipment installation, including connections, and to assist in field testing. Report results in writing.

B. Perform the following field tests and inspections and prepare test reports:

1. Leak Test: After installation, test for leaks. Repair leaks and retest until no leaks exist.
2. Operational Test: After electrical circuitry has been energized, confirm proper operation.
3. Test and adjust controls and safeties. Replace damaged and malfunctioning controls and equipment.

C. Remove and replace water heaters that do not pass tests and inspections and retest as specified above.

3.4 DEMONSTRATION

A. Engage a factory-authorized service representative to train Owner's maintenance personnel to adjust, operate, and maintain water heaters. Refer to Division 01 Section "Demonstration and Training."

END OF SECTION 223400

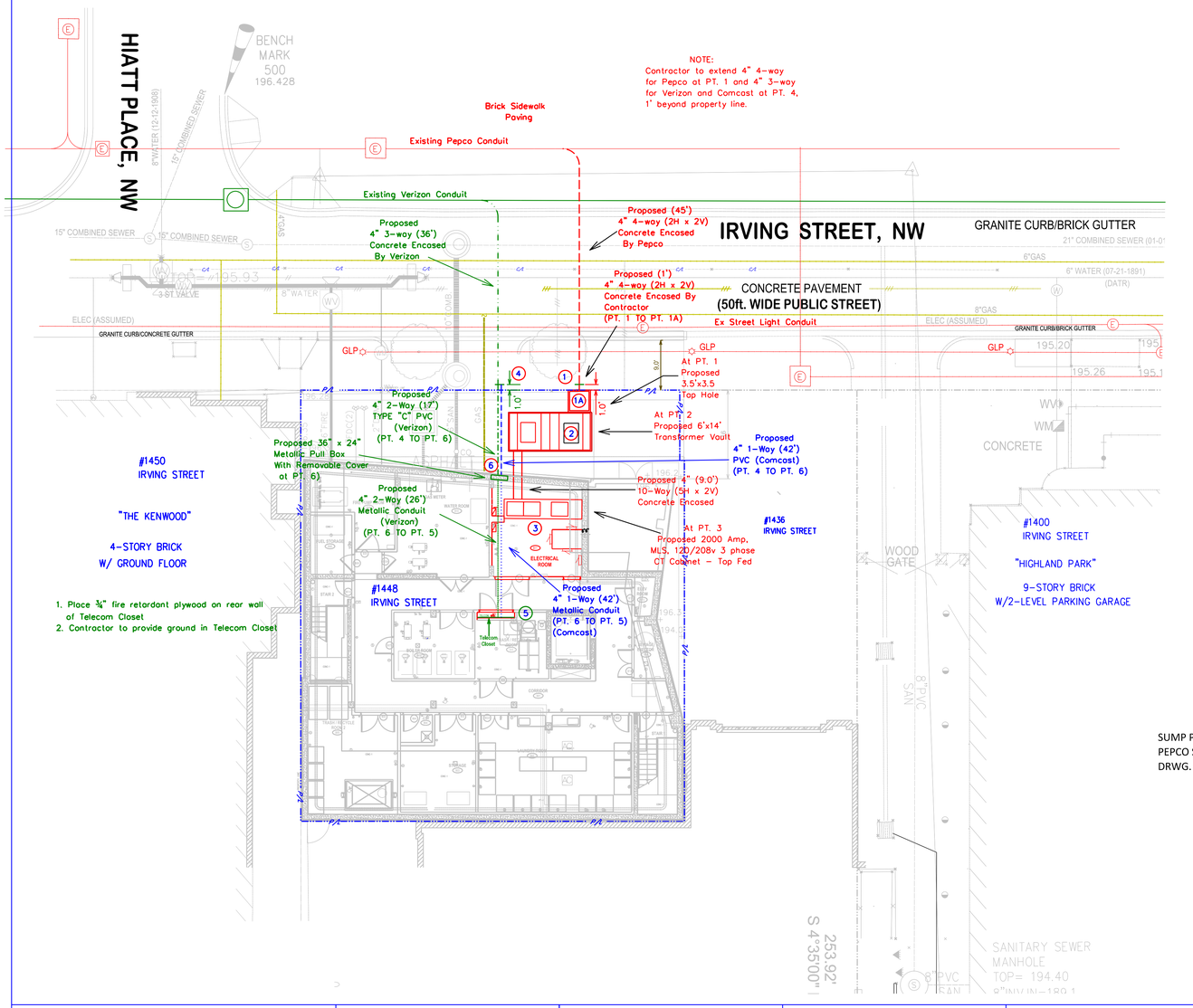

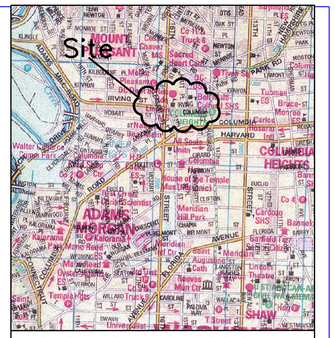

Pepco Conditions

- Customer to obtain all permits/permissions required by others on private property.
- All materials used are to conform to Pepco specifications. All work must be done in accordance with Pepco's standards and specifications.
- Customer to build, own and maintain all structural facilities including conduits, splice boxes, transformer pads etc. on private property.
- Work to be done in a manner acceptable to Pepco and inspected by Pepco's Conduit Department before encasement of backfilling. Call (202) 388-2635 two (2) weeks in advance to arrange inspection.
- Pepco is to be notified before the setting of any peles, manholes, pouring of any concrete and/or the backfilling of any trench to make arrangements for the inspection and approval of your on site service connection structural equipment. **(Customer must first submit a drawing of the facilities to be built for Pepco and be approved by Pepco)** Call (202) 388-2635 between 7-9 a.m. or 3-4 p.m.
- Customer to be responsible for any water problems related to these facilities.
- For locations of utilities, call 24 hours a day 1-800-257-7777, 48 hours in advance of work in this vicinity.
- All other underground utilities in the vicinity are to be shown. The minimum horizontal and vertical clearances set by Pepco are to be maintained. Maintain 5', 0" minimum (horizontal) and 1' 0" (vertical) clearance from all underground utilities.
- Conduit to be built in accordance with Pepco Specification Drawings No. SD 6 0480S1 and CD.001.01.
- All service conduit must be electrical type 4" Schedule 40 PVC.
- Sweepbends must have a radius of no less than 36".
- Nylon pull lines to be installed in each duct for future cable installation SD_7_0727.
- No more than 180° total bends of duct line inclusive of Pepco's extension if necessary.
- Conduit to have three feet (3') of cover (top of duct to finished grade).
- Conduit to be encased in 3000 PSI concrete with pea gravel. No metallic materials (rebars, hold down wires, etc.) shall be permitted in spaces between each duct.
- Customer to rod all conduits, clear any obstructions and provide nylon pull lines prior to the installation of Pepco cables.
- Manholes to be constructed with 4000 PSI concrete.
- Refer to Pepco Standard Drawings CD.005.01 for meter equipment mounting informaiion.
- Refer to Pepco Standard Drawings SD_7_0695 and SD_1_7_06945 for Switchboard with Built-In-Compartment/C.T. Cabinet specificaiions CD.004.01.
- The trough must have removable covers with provisions for seals, all removable covers to be handled by one man.
- All metering current transformer mounting dimensions, drillings, spacings, and studs must comply with Pepco Specification Drawing 7-5-606 Revision A. The minimum acceptable dimensions, drillings, etc. for Pepco line connections to C/T cabinets/compartments (including safety barrier were applicable), mainline switches and main incoming bus cabinets/compartments/sections are shown on Pepco Purchase Specification Drawings 7-5-695 Revision B and/or 705-694 Revision B.
- Hylugs used by Pepco require NEMA 2-hole spacing.
- The maximum size of a service conductor rated 600 volts or less shall not exceed 500 kcm for Copper or Aluminum conductor.
- The meter location(s) must be approved by Pepco's Meter Department. Pepco will provide metering equipment at the following lsocations:
  Forestville office: *(301) 967-5206*
  Rockville office: *(301) 670-8763*
  D. C. Office: *(301) 967-5226*

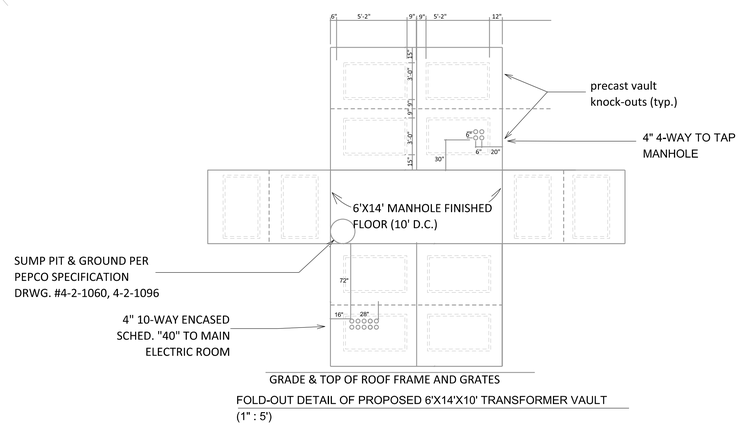

FOLD-OUT DETAIL OF PROPOSED 6'X14'X10' TRANSFORMER VAULT
(1" : 5')

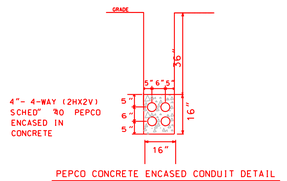

PEPCO CONCRETE ENCASED CONDUIT DETAIL
(NTS)

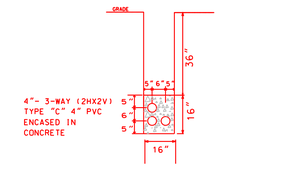

VERIZON CONCRETE ENCASED CONDUIT DETAIL
(NTS)

LA CASA
PERMANENT SUPPORTIVE HOUSING

1448 IRVING STREET NW
WASHINGTON, DC

CLIENT + USER
DEPARTMENT OF GENERAL SERVICES
2000 14th STREET NW
EIGHTH FLOOR
WASHINGTON, DC 20009
T (202) 724.4400
F (202) 727.1837
WWW.DRES.DC.GOV

DEPARTMENT OF HUMAN SERVICES
64 NEW YORK AVENUE NE
SIXTH FLOOR
WASHINGTON, DC 20002
T (202) 671.4200
F (202) 671.4325
WWW.DHS.DC.GOV

JV ARCHITECT
STUDIOTWENTYSEVENARCHITECTURE
1625 U STREET NW
SUITE 800
WASHINGTON, DC 20009
T (202) 939.0027
F (202) 939.0270
WWW.STUDIO27ARCH.COM

LEO A DALY
1201 CONNECTICUT AVENUE NW
TENTH FLOOR
WASHINGTON, DC 20036
T (202) 861.4600
F (202) 872.8330
WWW.LEOADALY.COM

CIVIL ENGINEER
AMT, LLC
12 G STREET NE
SUITE 430
WASHINGTON, DC 20002
(202) 289.4545

STRUCTURAL ENGINEER
ROBERT SILMAN ASSOCIATES
1053 31ST STREET NW
WASHINGTON, DC 20007
T (202) 333.4230
F (202) 318.3015

MEP ENGINEER
METROPOLITAN CONSULTING ENGINEERS
4340 NEBRASKA AVENUE NW
WASHINGTON, DC 20016
T (202) 244.8860

UTILITY CONSULTANT
RICHTER & ASSOCIATES
10860 Crabbs Branch Way
Rockville, MD 20855
T (301) 548-7478
F (301) 548-7478

KEY PLAN

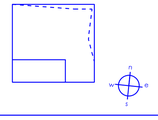

No.	Date	Description
-	21 MAR '12	PERMIT SUBMISSION
	23 APR '12	BID SET
1	23 MAY '12	ADDENDUM #2

ADDENDUM #2

DRAWING TITLE: STRUCTURAL FACILITIES DRAWING FOR PEPCO, VERIZON AND CATV

DRAWING TYPE: DRY UTILITY PLAN

DRAWING SCALE: 1" = 10'

DRAWING DATE: MAY 18, 2012

PROJECT NUMBER: 1109

DRAWING NUMBER: DU.01

COOLING TOWER SCHEDULE

BASIS OF DESIGN: BAC

DESIG.	LOCATION	EQUIP. SERVED	WATER DATA				OUT-DOOR DESIGN WB (°F)	ELECTRIC IMMERSION HEATER		FAN MOTOR DATA				OPERATING WEIGHT PER CELL (LB)	WINTERIZED (YES OR NO)	MODEL
			GPM	TEMP (°F)		NO. OF CELL		QTY	KW (EA)	HP (EA)	CFM (HI)	VOLT	PHASE			
				ENT	LVG											
CT-1	SEE FLR PLAN	HX-1	195	95	85	1	78	1	5	10	–	208	3	2,590	YES	BAC VTO-75

NOTES:

1. PROVIDE VARIABLE FREQUENCY DRIVE.
2. PROVIDE ELECTRIC WATER LEVEL CONTROL PACKAGE.
3. PROVIDE VIBRATION CUTOUT SWITCH.

PLATE & FRAME HEAT EXCHANGER SCHEDULE

DESIGNATION	COOLING TOWER WATER					HEAT PUMP SIDE					MIN SURFACE AREA (SQ. FT)	OPERATING WEIGHT (LBS)	MANUFACTURER	REMARKS
	GPM	ENT WTR (°F)	LVG WTR (°F)	P.D. (PSI)	NOZZLE SIZE (INCH)	GPM	ENT WTR (°F)	LVG WTR (°F)	MAX P.D. PSI	NOZZLE SIZE (INCH)				
HX-1	165	83	95	9.9	–	165	100	88	9.8	–	126.5	719.0	GEA ECOFLEX PLATE HEAT EXCHANGER	

FAN SCHEDULE

UNIT NO.	LOCATION	TYPE	WHEEL DIAMETER	TOTAL CFM	OA CFM	TSP IN WG	RPM	DRIVE TYPE	MOTOR			MANUFACTURER MODEL NUMBER	REMARKS
									HP	VOLTS	PH		
EF-1	HRU-1	–	–	1750	–	1.75	–	BELT	1	208	1	–	–
EF-2	NOT USED	–	–	–	–	–	–	–	–	–	–	–	–
EF-3	NOT USED	–	–	–	–	–	–	–	–	–	–	–	–
EF-4	NOT USED	–	–	–	–	–	–	–	–	–	–	–	–
EF-5	NOT USED	–	–	–	–	–	–	–	–	–	–	–	–
EF-6	NOT USED	–	–	–	–	–	–	–	–	–	–	–	–
EF-7	ROOF	UTILITY	–	250	–	0.4	1,800	BELT	1/3	120	1	COOK, CPV 60	–
EF-8	ROOF	UTILITY	–	150	–	0.4	1,500	BELT	1/3	120	1	COOK, CPV 60	–
EF-9	ROOF	UTILITY	–	375	–	0.6	2,050	BELT	1/3	120	1	COOK, CPV 70	–
EF-10	ROOF	UTILITY	–	1050	–	0.35	2,050	BELT	1/3	120	1	COOK, CPV 100	–
EF-11	ROOF	UTILITY	–	350	–	0.3	1,800	BELT	1/3	120	1	COOK, CPV 70	–
EF-12	ROOF	UTILITY	–	500	–	0.55	1,650	BELT	1/3	120	1	COOK, CPV 80	–
EF-13	ROOF	UTILITY	–	800	–	1.00	2,300	BELT	1/2	120	1	COOK, CPV 80	–
EF-14	ROOF	UTILITY	–	600	–	0.55	1,700	BELT	1/3	120	1	COOK, CPV 80	–
EF-15	ROOF	UTILITY	–	375	–	0.55	1,975	BELT	1/3	120	1	COOK, CPV 70	–
EF-16	TOILETS	CABINET	–	65	–	0.40	–	DIRECT	12.5A	120	1	MARLEY 110DW	–
EF-17	TOILETS	CABINET	–	65	–	0.40	–	DIRECT	12.5A	120	1	MARLEY 110DW	–
													–
SF-1	BASEMENT	IN-LINE	–	650	650	0.6	–	BELT	1/3	120	1	COOK, 90 SQI	–
SF-2	BASEMENT	IN-LINE	–	300	300	0.65	2,600	BELT	1/2	120	1	COOK, SQN 70	–
SF-3	BASEMENT	IN-LINE	–	600	600	1.25	2,300	BELT	1/2	120	1	COOK, SQN 880	–
SF-4	NOT USED	–	–	–	–	–	–	–	–	–	–	–	–
SF-5	HVU-1	UTILITY/FC	–	700	700	1	–	BELT	1	208	1	–	–
SF-6	HVU-2	UTILITY/FC	–	800	800	1	–	BELT	1	208	1	–	–
SF-7	HRU-1	UTILITY/FC	–	1310	1310	1.5	–	BELT	1	208	1	–	

NOTES:

1. PROVIDE GRILLE WITH ALL CEILING IN-LINE FAN.
2. PROVIDE VARIABLE SPEED CONTROLLER FOR ALL DIRECT DRIVE FANS.
3. EF-16 SHALL BE COMBINATION HEAT/FAN/LIGHT, PROVIDE THREE WAY SWITCH TO CONTROL HEAT, FAN AND LIGHT.

HEAT RECOVERY UNIT SCHEDULE

UNIT NO.	LOCATION	SUPPLY										RETURN										TYPE	MANUFACTURER MODEL NUMBER	REMARKS
		CFM	SUMMER				WINTER				P.D	CFM	SUMMER				WINTER				P.D			
			EAT °F		LAT °F		EAT °F		LAT °F		IN.		EAT °F		LAT °F		EAT °F		LAT °F		IN.			
			DB	WB	DB	WB	DB	WB	DB	WB	WC		DB	WB	DB	WB	DB	WB	DB	WB	WC			
HRU-1	ROOF	1310	95	78	78.0	65.8	10	9	60.3	48.4	–	1750	75	62.5	–	–	70	54.4	–	–	–	ENTHALPY	AMERICAN ALDES WHE1500E	FOR SUPPLY SF-7 AND EXHAUST FAN, SEE THE FAN SCHEDULE.

NOTES:

1. UNITS TO BE PROVIDED WITH: a. FROST CONTROL, b. VFD
2. REFER TO THE FAN SCHEDULE FOR POWER REQUIREMENTS.
3. PROVIDE MERV 8 & 13 FILTERS AT INTAKE.

ELECTRIC UNIT HEATER SCHEDULE

UNIT NO.	LOCATION	CFM	MTR HP	EAT °F	MBH	TOTAL KW	ELECTRICAL DATA		MANUFACTURER MODEL NUMBER	REMARKS
							VOLTS	PHASE		
EUH-A	SEE FLOOR PLAN	175	–	70	6.8	2	240	1	QMARK, AWH4404 FORCED AIR WALL HEATER	THIS UNIT IS IN THE MAIN ELECTRICAL ROOM AND WILL RUN TO MAINTAIN 60°F IN HEATING SEASON ONLY
ECH-A	SEE FLOOR PLAN	65	–	70	2.5	0.75	120	1	BERKO QCH SERIES	

NOTES:

1. CONVERT UNIT WIRING IN FILED TO MATCH KW INDICATED.

HOT WATER BOILER

UNIT NO.	LOCATION	GAS INPUT (MBH)	GROSS OUTPUT (MBH)	NET I=B=R (MBH)	WATER FLOW (GPM)	TEMP DIFF (°F)	PRESSURE DROP (FT)	WORKING PRESSURE MAX. (PSI)	RELIEF VALVE PRESSURE (PSI)	GAS PRESSURE		AIR INLET SIZE (INCH)	VENT SIZE (INCH)	ELECTRICAL DATA			BASIS OF DESIGN	REMARKS
										MIN	MAX			VOLTS	PHASE	MCA		
B-1	BOILER RM	500	467	406	31	30	5	160	50	4	10.5	4"	4"	120	1	2.7	LOCHINVAR	KB-501
B-2	BOILER RM	500	467	406	31	30	5	160	50	4	10.5	4"	4"	120	1	2.7	LOCHINVAR	KB-501

NOTES:

1. BOILER MODULATION 10:1 TURNDOWN.
2. PROVIDE CONDENSATE NEUTRALIZING KIT.
3. INSTALL PER MANUFACTURER'S RECOMMENDATION.

HEAT PUMP UNIT SCHEDULE

UNIT NO.	FAN DATA					GPM	WATER P.D. (FT. HD.)	COOLING DATA						HEATING DATA				ELECTRICAL DATA					BASIS OF DESIGN	REMARKS
	TOTAL CFM	MIN. OA CFM	ESP (" WG)	FAN HP	RPM			EAT		MBH CAPACITY		EWT (°F)	EER	TOTAL MBH	EAT (°F)	EWT (°F)	COP	VOLTS	PHASE	MCA (AMPS)	MOCP (AMPS)	ELECTRIC HEAT (KW)		
								DB °F	WB °F	TOTAL	SENSIBLE													
HPU-A	600	0	0.7	1/3	–	3.75	5.47	75.0	63.0	16.3	12.8	88	14.2	23.7	70	70	5.5	208	1	11.3	15	–	MCQUAY-WGSV0191	PROVIDE WITH ECM MOTOR
HPU-B	600	100	0.7	1/3	–	3.75	5.47	78.2	63.0	16.3	14.7	88	14.2	24.2	60.5	70	6.0	208	1	11.3	15	–	MCQUAY-WGSV0191	PROVIDE WITH ECM MOTOR
HPU-C	500	0	0.7	1/3	–	3.10	3.10	75.0	63.0	14.1	10.9	88	14.7	19.7	70	70	5.5	208	1	10.0	15	–	MCQUAY-WGH0151	PROVIDE WITH ECM MOTOR
HPU-D	300	0	0.5	1/8	–	1.6	4.0	75.0	63.0	8.2	6.4	88	11.3	10.6	70	70	4.2	208	1	5.8	15	–	MCQUAY-WCCH4009	
HPU-AA	290	0	–	1/30	–	1.5	1.3	75.0	63.0	7.4	5.9	88	14.0	8.0	70	70	4.5	208	1	4.0	6	–	MCQUAY-WMHC1007	
HPU-BB	450	0	–	1/10	–	3.3	6.7	75.0	63.0	15.4	10.7	88	12.7	19.1	70	70	4.2	208	1	9.5	15	–	MCQUAY-LM SERIES LM 18	
HPU-1	1050	650	0.7	3/4	–	8.5	3.1	84.3	69.7	44.4	30.2	88	16.3	49.6	50.0	70	5.9	208	1	29.6	45	–	MCQUAY-WGSH0421	PROVIDE WITH ECM MOTOR
HPU-2	600	120	0.5	1/3	–	4.0	6.2	78.8	65.5	17.1	13.5	88	15.0	24.3	58.6	70	6.2	208	1	10.3	15	–	MCQUAY-WGSV0191	PROVIDE WITH ECM MOTOR
HPU-3	2000	210	0.7	1	–	15.7	10.5	77.1	64.1	59.8	46.4	88	14.8	76.8	63.7	70	5.1	208	1	42.4	60	–	MCQUAY-WGSH0601	PROVIDE WITH ECM MOTOR
HPU-4	700	120	0.7	1/3	–	8.0	8.4	75.7	63.0	24.1	18.1	88	16.1	29.9	67.9	70	5.6	208	1	19.9	30	–	MCQUAY-WGSH0241	PROVIDE WITH ECM MOTOR
HPU-5	800	100	0.5	1/3	–	8.0	8.3	75.7	63.0	24.5	19.5	88	16.1	30.1	67.9	70	5.7	208	1	19.9	30	–	MCQUAY-WGSH0241	PROVIDE WITH ECM MOTOR
HPU-6	1400	260	0.7	3/4	–	8.5	3.1	78.7	65.4	42.8	32.0	88	15.4	50.0	58.9	70	5.4	208	1	29.7	45	–	MCQUAY-WGSH0421	PROVIDE WITH ECM MOTOR
HPU-7	1090	0	0.7	1/2	–	8.5	7.9	75.0	63.0	33.7	24.9	88	16.2	42.2	70.0	70	5.4	208	1	22.6	35	–	MCQUAY-WGSH0361	PROVIDE WITH ECM MOTOR
HPU-8	800	0	0.7	1/3	–	8.0	8.3	75.7	63.0	24.5	19.5	88	16.1	30.1	67.9	70	5.7	208	1	19.9	30	–	MCQUAY-WGSH0241	PROVIDE WITH ECM MOTOR

NOTES

1. DUCTWORK DOWNSTREAM AND UP STREAM OF ALL UNITS SHALL BE PROVIDED WITH SOUND LINING.
2. PROVIDE APPROVED WATER LEVEL DETECTOR IN AUXILIARY DRAIN PAN INTERLOCKED TO SHUT DOWN UNIT UPON DETECTION OF WATER. INTERLOCK WITH BAS FOR ALARM. SIMILAR TO RLE TECHNOLOGIES 'SD' WITH 'RASP'. PROVIDE TRANSFORMER FOR EACH UNIT.
3. PROVIDE COMBINATION MOTOR STARTER AND FUSIBLE DISCONNECTED SWITCH.
5. UNITS TO HAVE SINGLE POINT ELECTRICAL CONNECTIONS WITH DISCONNECT AND FUSES PER NEC.
6. PROVIDE AQUASTAT TO LOCK-OUT COMPRESSORS WHEN WATER TEMPERATURE DROPS BELOW 50 DEG F.
7. PROVIDE 4" THICK MERV 13 AT UNIT INLET OF ALL HPU.
8. PROVIDE HPU-AA WITH INTERGRAL THERMOSTAT.

PUMP SCHEDULE

UNIT NO.	LOCATION	SERVES	GPM	HEAD (FT)	% EFF	PUMPED FLUID	ELECTRIC MOTOR DATA				MANUFACTURER MODEL NUMBER	REMARKS
							HP	RPM	VOLTS	PHASE		
P-1	BOILER RM	COOLING TOWER	140	70	0.69	WATER	7.5	–	208	3	B&G, 1510 SERIES, 2BC	–
P-2	BOILER RM	COOLING TOWER	140	70	–	WATER	7.5	–	208	3	B&G, 1510 SERIES, 2BC	STAND BY
P-3	BOILER RM	HX-1	140	90	–	WATER	10	–	208	3	B&G, 1510 SERIES, 2BC	–
P-4	BOILER RM	HX-1	140	90	–	WATER	10	–	208	3	B&G, 1510 SERIES, 2BC	STAND BY
P-5	BOILER RM	BOILER	35	25	–	WATER	1	–	208	3	B&G, 80 SERIES, 2x2x7	–
P-6	BOILER RM	BOILER	35	25	–	WATER	1	–	208	3	B&G, 80 SERIES, 2x2x7	–
P-7	BOILER RM	BOILER	15	35	–	WATER	0.75	–	208	3	B&G, 80 SERIES, 1.5x1.5x7B	–
P-8	BOILER RM	BOILER	15	35	–	WATER	0.75	–	208	3	B&G, 80 SERIES, 1.5x1.5x7B	STAND BY

NOTES:

1. PROVIDE P-1, P-2, P-3 AND P-4 WITH VFD.

EXPANSION TANK SCHEDULE

UNIT NO.	LOCATION	SERVES	DIAPHRAGM TYPE TANK (YES/NO)	TANK VOL (GAL)	ACCEPT VOL (GAL)	TANK DIA (IN)	TANK HEIGHT (IN)	MANUFACTURER MODEL NUMBER	REMARKS
ET - 1	MECHANICAL	CW LOOP	YES	211	211	30	82"	B&G B 800	
ET - 2	MECHANICAL	HW LOOP	YES	211	211	30	82"	B&G B 800	

AIR SEPARATOR: BELL & GOSETT MODEL R-4F WITH STRAINER. INLET AND OUTLET SIZE 4".

LA CASA
PERMANENT SUPPORTIVE HOUSING

1448 IRVING STREET NW
WASHINGTON, DC

CLIENT + USER
DEPARTMENT OF GENERAL SERVICES
2000 14TH STREET NW
EIGHTH FLOOR
WASHINGTON, DC 20009
T (202) 724.4400
F (202) 727.0877
WWW.DMS.DC.GOV

DEPARTMENT OF HUMAN SERVICES
64 NEW YORK AVENUE NE
SIXTH FLOOR
WASHINGTON, DC 20002
T (202) 671.4200
F (202) 671.4325
WWW.DHS.DC.GOV

JV ARCHITECT
STUDIOTWENTYSEVENARCHITECTURE
1600 K STREET NW
SUITE 800
WASHINGTON, DC 20006
T (202) 939.0027
F (202) 939.0227
WWW.STUDIO27ARCH.COM

LEO A DALY
1201 CONNECTICUT AVENUE NW
TENTH FLOOR
WASHINGTON, DC 20036
T (202) 861.4600
F (202) 872.8530
WWW.LEOADALY.COM

CIVIL ENGINEER
AMT, LLC
10 G STREET NE
SUITE 430
WASHINGTON, DC 20002
(202) 289.4545

STRUCTURAL ENGINEER
ROBERT SILMAN ASSOCIATES
1010 16TH STREET NW
WASHINGTON, DC 20007
T (202) 333.6230
F (202) 318.3015

MEP ENGINEER
METROPOLITAN CONSULTING ENGINEERS
4345 NEBRASKA AVENUE NW
WASHINGTON, DC 20016
T (202) 244-8080

KEY PLAN
IRVING ST NW

No.	Date	Description
–	13 MAR '12	PERMIT SUBMISSION
–	25 APR '12	BID SET
1	23 MAY '12	ADDENDUM #2

ADDENDUM #2

DRAWING TITLE: SCHEDULES
DRAWING TYPE: MECHANICAL
DRAWING SCALE: NTS
DRAWING DATE: APRIL 23, 2012
PROJECT NUMBER: 1116.00

DRAWING NUMBER
M4.1

HOT WATER UNIT HEATER SCHEDULE

UNIT NO.	LOCATION	MBH	AIR DATA			WATER DATA					MOTOR DATA				MANUFACTURER: TRANE	REMARKS
			CFM (HI)	TEMP (°F) ENT	EXT SP (IN. WG)	# OF ROWS	GPM	TEMP (°F) ENT	TEMP (°F) LVG	PD (FT)	HP	RPM (HI)	VOLT	PHASE		
UH-A	SEE FLOOR PLAN	11	350	70	–	–	1.1	180	150	–	1/8	1150	120	1		

NOTES:

1. PROVIDE UNITS WITH INTEGRAL DISCONNECT SWITCH.
2. PROVIDE UNIT MOUNTED THERMOSTAT & FAN SPEED SWITCH FOR ALL UNITS UNLESS INDICATED OTHERWISE.

MISCELLANEOUS:

CP-A, CONDENSATE PUMP (LITTLE GIANT), 1/30 HP, 120V, 1.5 AMPS, PROVIDE CHECK VALVE AT PUMP DISCHARGE, MODEL NO. 2P351 15 GPH AT 25 FEET OF HEAD.

AIR DEVICE SCHEDULE

DEVICE NO.	TYPE	AIR FLOW (CFM)	MODULE SIZE	NECK SIZE	DAMPER TYPE	P.D. IN. WG	NC	REMARKS
CD	LOUVERED	0–120	15X15	6"ø	OPPOSED BLADE	0.11	28	TITUS TDCA, 24X24
	LOUVERED	125–200	15X15	8"ø	OPPOSED BLADE	0.11	29	TITUS TDCA, 24X24
	LOUVERED	205–350	15X15	10"ø	OPPOSED BLADE	0.11	30	TITUS TDCA, 24X24
	LOUVERED	355–500	15X15	12"ø	OPPOSED BLADE	0.11	30	TITUS TDCA, 24X24
	LOUVERED	505–605	15X15	14"ø	OPPOSED BLADE	0.11	30	TITUS TDCA, 24X24
CG	PERFORATED	–	24x24	22x22	–	0.05	25	TITUS, MATCH CEILING DIFFUSER
SR	AEROBLADE	0–125	–	6X6	OPPOSED BLADE	0.08	25	TITUS 272FL
	AEROBLADE	126–240	–	10x6	OPPOSED BLADE	0.11	25	TITUS 272FL
	AEROBLADE	241–330	–	14x6	OPPOSED BLADE	0.11	25	TITUS 272FL
	AEROBLADE	331–440	–	18x6	OPPOSED BLADE	0.11	25	TITUS 272FL
	AEROBLADE	441–540	–	22X6	OPPOSED BLADE	0.11	25	TITUS 272FL
ER/RR/RG	AEROBLADE	0–95	–	6X6	OPPOSED BLADE	0.05	25	TITUS 3FL
	AEROBLADE	96–205	–	12x6	OPPOSED BLADE	0.05	25	TITUS 3FL
	AEROBLADE	206–315	–	18x6	OPPOSED BLADE	0.05	29	TITUS 3FL
	AEROBLADE	316–500	–	18x10	OPPOSED BLADE	0.05	29	TITUS 3FL
	AEROBLADE	–1800	–	24X24	OPPOSED BLADE	0.05	35	TITUS 3FL
LD–1	LINEAR SLOT	0–60 CFM/FT	(2) 3/4" SLOTS	–	PATTERN CONTROLLER	0.08	25	TITUS ML–38
LD–2	LINEAR SLOT	61–85 CFM/FT	(3) 3/4" SLOTS	–	PATTERN CONTROLLER	0.08	25	TITUS ML–38
LD–R1	LINEAR SLOT	0–65 CFM/FT	(2) 3/4" SLOTS	–	–	0.08	25	TITUS MLR–38
LD–R2	LINEAR SLOT	0–100 CFM/FT	(3) 3/4" SLOTS	–	–	0.08	25	TITUS MLR–38

NOTES:

1. BORDER STYLE SHALL MATCH CEILING TYPE. SEE ARCHITECTURAL DRAWING.
2. FLEXIBLE DUCT SIZE SHALL BE THE SAME AS THE DIFFUSER NECK SIZE.
3. ABOVE SCHEDULE SHALL BE USED IF OTHER SIZES ARE NOT INDICATED ON THE FLOOR PLAN.
4. PROVIDE LINEAR DIFFUSER WITH INSULATED PLENUM, FULL LENGHT OF DIFFUSER x 0'–8" WIDTH x 0'–8' HIGH.

PULSED POWER WATER TREATMENT SCHEDULE

TAG	SERVICE	DIAMETER inches	CONSTRUCTION	POWER SUPPLY	CABLE LENGTH FEET	CONTROL PANEL	REFERENCE MANUFACTURER'S MODEL	REMARKS
WT–1	COOLING TOWER 1	4	STEEL	15A/220V/1ø/60Hz	AS REQUIRED	COMPLETE WITH TRANSFORMER	DOLPHIN 1200 COPPER WITH SERIES 1000 RIB CONTROL PANEL	–

AIR HANDLING UNIT SCHEDULE

UNIT NO.	SERVES	SYPPLY FANS	EXHAUST FANS	COOLING COIL	HEATING COIL	FILTERS	ENERGY RECOVERY	CONDENSATE UNIT	MANUFACTUREER MODEL NUMBER	REMARKS
HVU–1	LAUNDRY ROOM	SF–5	–	–	HC–1	F–1A/F–1B	–	–	MCQUAY–004	SEE FAN SCH. FOR POWER REQ.
HVU–2	TRASH/RECYCLE ROOMS	SF–6	–	–	HC–2	F–2A/F–2B	–	–	MCQUAY–004	SEE FAN SCH. FOR POWER REQ.

NOTES

1. PROVIDE UNIT SECTIONS AS INDICATED.
2. PROVIDE COMBINATION MOTOR STARTER AND FUSIBLE DISCONNECTED SWITCH.
3. UNITS TO BE MODULAR TO PASS THRU 5 FT WIDE & 6.5 FT HIGH DOOR.
4. UNITS TO HAVE SINGLE POINT ELECTRICAL CONNECTIONS WITH DISCONNECT AND FUSES PER NEC.
5. PROVIDE FACE AND BYPASS DAMPER AHEAD OF HC–1.

HEATING COIL SCHEDULE

UNIT NO.	LOCATION	MEDIA	CFM	TOTAL MBH	EAT (°F)	GPM	FACE AREA SQ FT	ROWS	APD IN WG	WPD FT. WG	MANUFACTURER MODEL NUMBER	REMARKS
HC–1	HVU–1	WATER	600	39.6	10	3.0	1x3	2	0.1	4	MCQUAY	–
HC–2	HVU–2	WATER	800	52.8	10	3.6	1x6	2	0.1	4	MCQUAY	–

NOTES

1. SELECT COILS WITH 180° F EWT & 150° F LWT.

AIR FILTER SCHEDULE

UNIT NO.	LOCATION	CFM	PRESS DROP IN WG INITIAL	PRESS DROP IN WG FINAL	MERV	SIZE IN HIGHT	SIZE IN WIDTH	MANUFACTURER MODEL NUMBER	REMARKS
F–1A	HVU–1	600	0.2	0.6	8	20	16	MCQUAY	PLEATED MEDIA
F–2A	HVU–2	800	0.2	0.6	8	20	16	MCQUAY	PLEATED MEDIA
F–1B	HVU–1	600	0.4	0.8	13	20	16	MCQUAY	PLEATED MEDIA
F–2A	HVU–2	800	0.4	0.8	13	20	16	MCQUAY	PLEATED MEDIA
F–3	BASEMENT	900	0.4	0.8	13	–	–	MCQUAY	PROVIDE FILTER BOX CASING AND ACCESS DOOR

AIR CONDITIONING UNIT SCHEDULE

UNIT NO.	LOCATION	FAN DATA CFM	FAN DATA E.S.P. IN.WATER	FAN DATA MTR HP	FAN DATA OA CFM	COOLING DATA TOTAL MBH	COOLING DATA SENS. MBH	HEATING DATA MBH	HEATING DATA OA TEM	HEATING DATA ELECTRIC HEAT KW	HEATING DATA ELECTRIC HEAT STAGES	ELECTRICAL DATA VOLTS	ELECTRICAL DATA PHASE	ELECTRICAL DATA MCA	ELECTRICAL DATA MOCP	BASIS OF DESIGN	REMARKS
AC–1	BAEMENT	328	0.1	45W	–	16.2	12	–	–	–	–	208	1	1	15	MITSUBISHI–MSY A17NA	

CONDENSING UNIT SCHEDULE

UNIT NO.	LOCATION	SERVING	COOLING DATA CAPACITY MBH	COOLING DATA O.A.TEMP DEG. F	HEATING DATA CAPACITY MBH	HEATING DATA O.A.TEMP DEG F	ELECTRICAL DATA VOLTS	ELECTRICAL DATA PHASE	ELECTRICAL DATA MCA	ELECTRICAL DATA MOCP	BASIS OF DESIGN	REMARKS
CU–1	ROOF	AC–1	16.2	95	–	–	208	1	14	20	MITSUBISHI–MUY A17NA	

NOTES:

1. PROVIDE LOW AMBIENT CONTROL.

LA CASA
PERMANENT SUPPORTIVE HOUSING

1448 IRVING STREET NW
WASHINGTON, DC

CLIENT + USER
DEPARTMENT OF GENERAL SERVICES
3600 14TH STREET NW
EIGHTH FLOOR
WASHINGTON, DC 20009
T (202) 724.4400
F (202) 727.9077
WWW.DMS.DC.GOV

DEPARTMENT OF HUMAN SERVICES
64 NEW YORK AVENUE NE
SIXTH FLOOR
WASHINGTON, DC 20002
T (202) 671.4200
F (202) 671.4325
WWW.DHS.DC.GOV

JV ARCHITECT
STUDIOTWENTYSEVENARCHITECTURE
1600 K STREET NW
SUITE 800
WASHINGTON, DC 20006
T (202) 939.0027
F (202) 939.0270
WWW.STUDIO27ARCH.COM

LEO A DALY
1201 CONNECTICUT AVENUE NW
TENTH FLOOR
WASHINGTON, DC 20036
T (202) 861.4600
F (202) 872.8530
WWW.LEOADALY.COM

CIVIL ENGINEER
AMT, LLC
10 G STREET NE
SUITE 430
WASHINGTON, DC 20002
(202) 289.4545

STRUCTURAL ENGINEER
ROBERT SILMAN ASSOCIATES
1053 31ST STREET NW
WASHINGTON, DC 20007
T (202) 333.6230
F (202) 338.3015

MEP ENGINEER
METROPOLITAN CONSULTING ENGINEERS
4341 NEBRASKA AVENUE NW
WASHINGTON, DC 20016
T (202) 244.8880

KEY PLAN

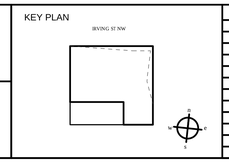

No.	Date	Description
	21 MAR '12	PERMIT SUBMISSION
1	25 APR '12	BID SET
2	23 MAY '12	ADDENDUM #2

ADDENDUM #2

DRAWING TITLE: SCHEDULES
DRAWING TYPE: MECHANICAL
DRAWING SCALE: NTS
DRAWING DATE: APRIL 23, 2012
PROJECT NUMBER: 1116.00

DRAWING NUMBER: M4.2

PLUMBING FIXTURE SCHEDULE

MARK	DESCRIPTION	ROUGH PIPE CONNECTION SIZE					NOTES
		CW	HW	TW	WASTE	VENT	
F-1	FLOOR OUTLET, VITREOUS CHINA WATER CLOSET, ELONGATED BOWEL WITH FLUSH TANK & OPEN FRONT SEAT. 0.5" ANGLE SUPPLY VALVE WITH 90 DEG TURN HANDWHEEL (CHROME)	0.5"	–	–	3"	1.5"	MAXIMUM 0.8 GALLONS WATER USE PER FLUSHING CYCLE. DUAL FLUSH. ACCESSIBLE PER CABO/ANSI A117.1, APPROXIMATELY 17.5" AFF
F-1A	FLOOR OUTLET, VITREOUS CHINA WATER CLOSET WITH FLUSH VALVE, SLOAN MODEL "111" OPEN FRONT SEAT, LESS COVER 0.5" ANGLE SUPPLY VALVE WITH 90 DEG TURN HANDWHEEL (CHROME)	1"	–	–	4"	2"	ACCESSIBLE PER CABO/ANSI A117.1, MAXIMUM 1.6 GALLONS PER FLUSH WATER USE, DUAL FLUSH, TOP OF SEAT APPROXIMATELY 17.5" ABOVE FLOOR
F-2	LAVATORY WITH GRID DRAIN & OFFSET TAIL PIECE TRAP 1.25' X 1.5", 17 GAUGE COPPER ALLOY P-TRAP WITH SLIP JOINT	0.5"	0.5"	–	1.5"	1.5"	0.5 GPM FLOW CONTROL AERATOR PROVIDE TEMPERATURE MIXING VALVE.
F-2A	LAVATORY WITH GRID DRAIN & OFFSET TAIL PIECE, TRAP 1.25' X 1.5", 17 GAUGE COPPER ALLOY P-TRAP WITH SLIP JOINT POLYBUTYLENE INSULATION KIT FOR TRAP AND SUPPLIES: TRUEBRO "HANDI LAV-GUARD" 102 (GRAY)	0.5"	–	0.5"	1.5"	1.5"	ACCESSIBLE PER CABO/ANSI A117.1, 0.5 GPM FLOW CONTROL AERATOR. PROVIDE TEMPERATURE MIXING VALVE.
F-3	TUB WITH PRESSURE BALANCE MIXING VALVE WITH CHECK STOPS: SHOWER HEAD; HAND SHOWER & DRAIN	0.5"	0.5"	–	2"	1.5"	1.75 GPM FLOW
F-4	KITCHEN SINK WITH DISPOSER & FAUCET 1.5"P TRAP, WITH SLIP JOINTS OR GROUND JOINTS, 17 GAUGE COPPER ALLOY. 1/2" ANGLE SUPPLIES WITH 90 DEG TURN HANDWHEEL STOPS (CHROME)	0.5"	0.5"	–	1.5"	1.5"	1.5 GPM FLOW CONTROL
F-5	MOLDED STONE SERVICE SINK, 24"L X 24"W X 10"H, FIAT "MSB-2424 FAUCET WITH VACUUM BREAKER, SERVICE STOPS AND HOSE THREAD OUTLET. FIAT 830 AA (CHROME) HOSE AND BRACHET, FIAT 832 AA STAINLESS STEEL WALL GUARDS. STAINLESS STEEL STRAINER, FIAT 1453 BB	0.5"	0.5"	–	3"	1.5"	WALL FAUCET SPOUT 36" AFF. 2.2 GPM FLOW CONTROL.
F-6	WALL MOUNT, DUAL HEIGHT STAINLESS STEEL DRINKING FOUNTAIN WITH RECESSED IN-WALL REFRIGERATION SYSTEM AND STAINLESS GRILLE,	0.5"	–	–	1.5"	1.5"	BARRIER-FREE ACCESS
F-7	LAUNDRY SINK	0.5"	0.5"	–	1.5"	1.5"	–
F-8	WASHER BOX, WITH BALL HOSE-END VALVE AND WATER HAMMER ARRESTOR	0.5"	0.5"	–	2"	1.5"	–

NOTES:
1. SEE ARCHITECTURAL DRAWINGS FOR FIXTURE SPECIFICATIONS AND ADDITIONAL REQUIREMENTS.
2. PROVIDE ALL ACCESSORIES AND REQUIRED SUPPLIES FOR A COMPLETE INSTALLATION.

DOMESTIC WATER HEATER SCHEDULE

MARK	SPECIFICATION	STORAGE CAPACITY	RECOVERY CAPACITY	NATURAL GAS INPUT	ELECTRICAL	VENT	NOTES
WH-1	LOCHINVAR AWN501PM	SEE ST-1 BELOW	594 GALLONS PER HOUR AT 100°F RISE	500,000 BTUH	1 AMP	4" VENT 4" AIR INLET	INSTALL PER MANUFACTURER'S RECOMMENDATIONS
WH-2	LOCHINVAR AWN501PM	SEE ST-1 BELOW	594 GALLONS PER HOUR AT 100°F RISE	500,000 BTUH	1 AMP	4" VENT 4" AIR INLET	INSTALL PER MANUFACTURER'S RECOMMENDATIONS

NOTES:
1. PROVIDE 6' WIDE DOUBLE DOOR.

ST-1	LOCHINVAR VERTICAL ASME TANK, MODEL RCA0650, 650 GALLONS, 92" HIGH X 52" ROUND, 3" INLET & OUTLET, 2" HOT WATER OUTLET

DRAIN SCHEDULE

MARK	DESCRIPTION	SPECIFICATION	LOCATION
FD-1	CAST IRON FLOOR DRAIN WITH 6" DIAMETER LIGHT DUTY NICKEL BRONZE STRAINER, 0.5" TRAP PRIMER, ADJUSTABLE STRAINER EXTENSION, AND CAST IRON P-TRAP.	ZURN ZN-415-6B-P-U.	SEE PLANS
FD-2	CAST IRON FLOOR DRAIN WITH 9" DIAMETER GRATE, 0.5" TRAP PRIMER, ADJUSTABLE STRAINER EXTENSION, AND CAST IRON P-TRAP.	ZURN	MECHANICAL ROOM
FS-1	STAINLESS STEEL FLOOR SINK WITH 12" SQUARE HEAVY DUTY 1/2 GRATE, BOTTOM DOME STRAINER, AND CAST IRON P-TRAP.	ZURN Z-1750-KC-HD-2	–

WATER MIXING VALVE SCHEDULE

MARK	DESCRIPTION	SPECIFICATION	NOTES
TMV-1	THERMOSTATIC WATER MIXING STATION WITH HIGH AND LOW CAPACITY THERMOSTATIC WATER MIXING VALVES, TEMPERATURE LIMIT STOPS, PRESSURE REDUCING VALVE AND THERMOMETER PREFABRICATED IN SURFACE MOUNTED CABINET.	LEONARD MODEL TM-1520A-DT	1 GPM MINIMUM FLOW RATE. 60 GPM MAXIMUM CAPACITY AT 5 PSI PRESSURE DROP. USE LEONARD PIPING METHOD 2

DOMESTIC WATER EXPANSION TANK SCHEDULE

MARK	SPECIFICATION	TOTAL TANK VOLUME	ACCEPTANCE VOLUME
ET-1	WATTS DET-20-M1	8.5 GALLONS	3.2 GALLONS

TRAP PRIMER SCHEDULE

MARK	SPECIFICATION	NOTES
TP-1	PRECISION PLUMBING PRODUCTS (PPP) PR-500 "PRIME-RITE" TRAP PRIMER VALVE.	WHERE THE TRAP PRIMER SERVES TWO DRAINS PROVIDE PPP DU-2 DISTRIBUTION MANIFOLD.

PUMP SCHEDULE

MARK	DESCRIPTION	SPECIFICATION	CAPACITY	PIPE SIZE	POWER REQUIREMENT	VOLTS	PHASE	CONTROLS	NOTES
DP-1 DP-2	SUBMERSIBLE DRAINAGE PUMP IN ELEVATOR PIT	STANCOR SE-50	21 GPM AT 30 FEET OF HEAD	2"	0.5" HORSEPOWER	115	1	WALL MOUNTED CONTROL PANEL.	SEE DETAIL ON DRAWING P-09.
FP-1	FIRE PUMP	PEERLESS 4PVF8G	750 GPM AT 75 PSI 450 GPM AT 80 PSI	4"	50 HORSEPOWER	208	3	FULL SERVICE FIRE PUMP CONTROLLER.	100,000 AMPS MINIMUM WITHSTAND RATING.
JP	PRESSURE MAINTENANCE (JOCKEY) PUMP	GRUNDFOS	3 GPM AT 65 PSI	1"	0.5 HORSEPOWER	208	3	WALL MOUNTED CONTROL PANEL.	
BP-1	DUPLEX BOOSTER PUMP	TIGER FLOW	92 GPM AT 30 PSI	2"	(2) 3 HORSEPOWER	208	3	VFD CONTROL PANEL	PROVIDE HYDRO-PNEUMATIC TANK
CP-1 CP-2	DOMESTIC WATER CIRCULATING PUMP	GRUNDFOS UP 15-42B5	5 GPM AT 20 FT.	3/4"	1/6 HORSEPOWER	115	1	CLIP-ON MOUNT AQUASTAT	ALL BRONZE
SE-1	SEWER EJECTOR	WEIL DUPLEX SUBMERSIBLE PUMPS SERIES 2400	20 GPM AT 25 FT.	2"	(2) 2 HORSEPOWER	208	3	–	NOTE #1 48" DIAM. X 42" DEEP TANK & STEEL COVER PLATE
SP-1	FOUNDATION DRAIN SUMP PUMP	WEIL DUPLEX	25 GPM AT 25 FT.	2"	(2) 2 HORSEPOWER	208	3	–	NOTE #1 48" DIAM. X 42" DEEP TANK & STEEL COVER PLATE
WHP-1	WATER HEATER IN-LINE PUMP	B&G SERIES 60, 1.5X1.5X5"	33 GPM AT 30 FT.	2"	3/4 HORSEPOWER	208	1	THERMOSTAT	ALL BRONZE
WHP-2	WATER HEATER IN-LINE PUMP	B&G SERIES 60, 1.5X1.5X5"	33 GPM AT 30 FT.	2"	3/4 HORSEPOWER	208	1	THERMOSTAT	ALL BRONZE

NOTES:
1. PROVIDE DUPLEX ALTERNATING CONTROL PANEL TO INCLUDE STARTERS, ALTERNATOR, CONTROL TRANSFORMER PUMP SELECTOR SWITCH WITH INDICATOR LIGHTS, SERIES 8100, WEIL 8200 SERIES TETHERED FLOAT CONTROLS WITH HIGH WATER ALARM.

LA CASA
PERMANENT SUPPORTIVE HOUSING

1448 IRVING STREET NW
WASHINGTON, DC

CLIENT + USER
DEPARTMENT OF GENERAL SERVICES
2000 14TH STREET NW
EIGHTH FLOOR
WASHINGTON, DC 20009
T (202) 724.4400
F (202) 727.5877
WWW.DMS.DC.GOV

DEPARTMENT OF HUMAN SERVICES
64 NEW YORK AVENUE NE
SIXTH FLOOR
WASHINGTON, DC 20002
T (202) 671.4200
F (202) 671.4325
WWW.DHS.DC.GOV

JV ARCHITECT
STUDIOTWENTYSEVENARCHITECTURE
1600 K STREET NW
SUITE 800
WASHINGTON, DC 20006
T (202) 939.0027
F (202) 939.0270
WWW.STUDIO27ARCH.COM

LEO A DALY
1201 CONNECTICUT AVENUE NW
TENTH FLOOR
WASHINGTON, DC 20036
T (202) 861.4600
F (202) 872.8530
WWW.LEOADALY.COM

CIVIL ENGINEER
AMT, LLC
10 G STREET NE
SUITE 430
WASHINGTON, DC 20002
(202) 289.4545

STRUCTURAL ENGINEER
ROBERT SILMAN ASSOCIATES
1053 31ST STREET NW
WASHINGTON, DC 20007
T (202) 333.6230
F (202) 318.3015

MEP ENGINEER
METROPOLITAN CONSULTING ENGINEERS
4345 NEBRASKA AVENUE NW
WASHINGTON, DC 20016
T (202) 244.8880

KEY PLAN

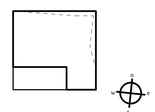

No.	Date	Description
-	21 MAR '12	PERMIT SUBMISSION
-	23 APR '12	BID SET
1	23 MAY '12	ADDENDUM #2

ADDENDUM #2

DRAWING TITLE: SCHEDULES

DRAWING TYPE: PLUMBING

DRAWING SCALE: NTS

DRAWING DATE: APRIL 23, 2012

PROJECT NUMBER: 1116.00

DRAWING NUMBER: P0.2

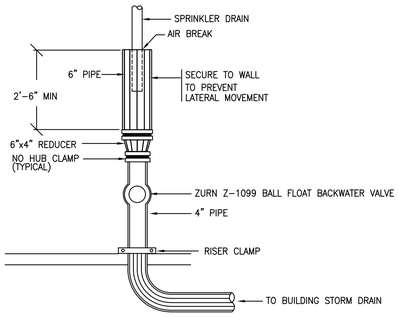

INDIRECT DRAINAGE RECEPTOR FOR SPRINKLER DRAIN

NO SCALE

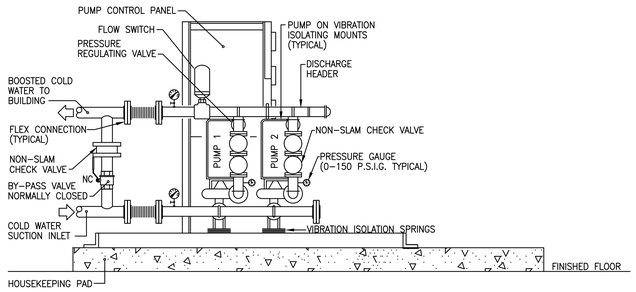

DOUBLE DOMESTIC WATER BOOSTER PUMP DETAIL

NO SCALE

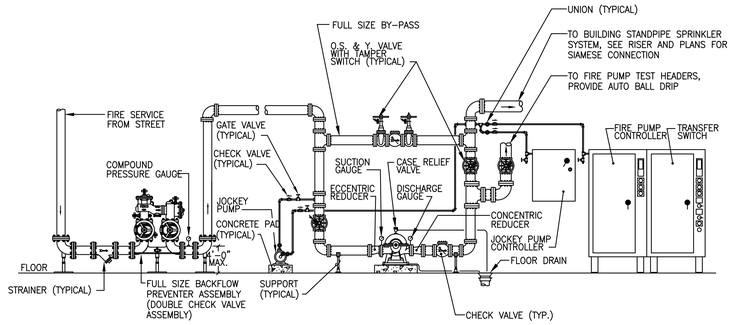

ELECTRIC FIRE PUMP - DETAIL

NO SCALE

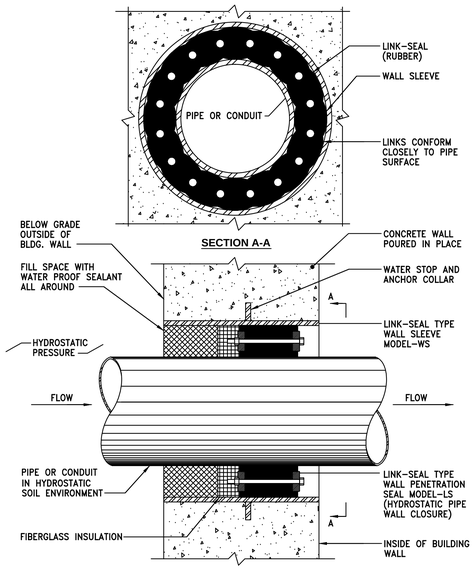

PERIMETER WALL PENETRATION / WATER PROOF SLEEVE DETAIL

NO SCALE

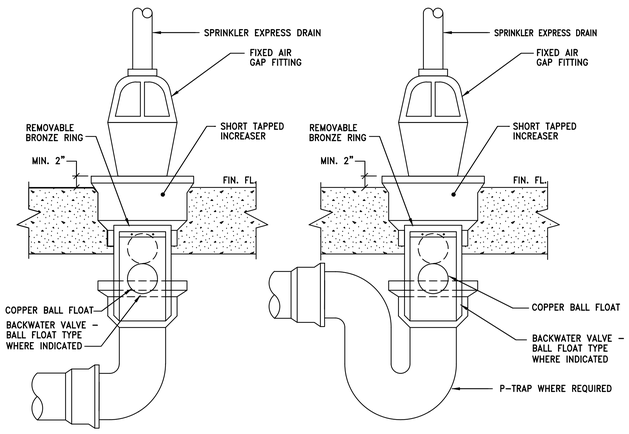

OPEN SIGHT DRAIN DETAIL W/ BACKWATER VALVE

NO SCALE

RISER SIZE 5" PIPE & SMALLER

3/4" BALD HEADED NIPPLE (TACK-WELD TO RISER CLAMP)

3/4"SCHEDULE 40 COUPLING WELDED TO 2" x 2" x 1/8" STEEL PLATE

RISER SIZE 6" PIPE & LARGER

2" BALD HEADED NIPPLE (TACK-WELD TO RISER CLAMP)

2" SCHEDULE 40 COUPLING WELDED TO 4" x 4" x 1/4" STEEL PLATE

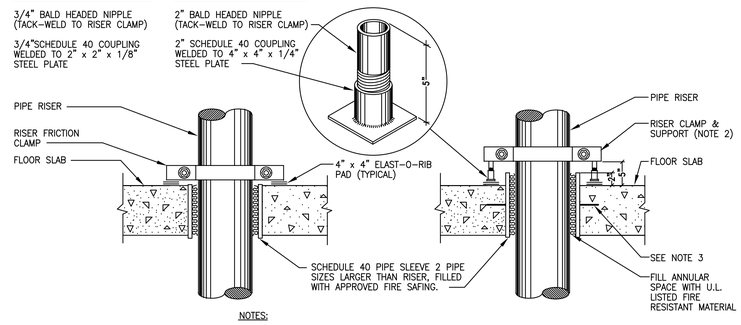

NOTES:

1. ALL FLOOR PENETRATIONS SHALL BE SEALED AND FIREPROOFED.
2. IN PUMP ROOMS, MECHANICAL ROOMS, PENTHOUSES, AND OTHER LOCATIONS WHERE WATER WOULD PERIODICALLY BE ON THE FLOOR, SLEEVES SHALL EXTEND 2" ABOVE THE FLOOR. RISER CLAMPS SHALL NOT REST ON SLEEVES.
3. FOR WATERPROOF INSTALLATIONS A FLANGE SHALL BE WELDED TO THE MIDPOINT OF THE SLEEVE AND THE ENTIRE ASSEMBLY GALVANIZED AFTER FABRICATION.

RISER SUPPORT DETAIL

NO SCALE

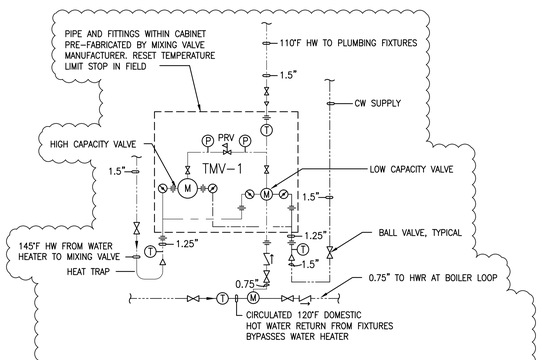

THERMOSTATIC WATER MIXING VALVE MANIFOLD ASSEMBLY

NO SCALE

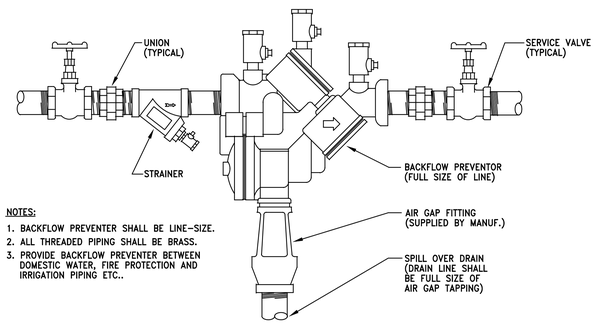

NOTES:

1. BACKFLOW PREVENTER SHALL BE LINE-SIZE.
2. ALL THREADED PIPING SHALL BE BRASS.
3. PROVIDE BACKFLOW PREVENTER BETWEEN DOMESTIC WATER, FIRE PROTECTION AND IRRIGATION PIPING ETC..

BACKFLOW PREVENTION DEVICE (REDUCED PRESSURE ZONE) - DETAIL

NO SCALE

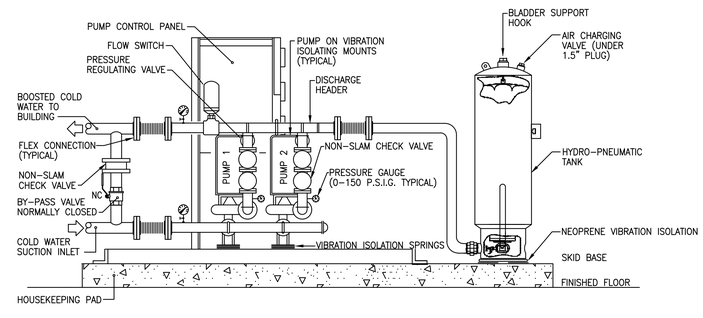

DOUBLE DOMESTIC WATER BOOSTER PUMP DETAIL

NO SCALE

LA CASA

PERMANENT SUPPORTIVE HOUSING

1448 IRVING STREET NW
WASHINGTON, DC

CLIENT + USER

DEPARTMENT OF GENERAL SERVICES
2000 14TH STREET NW
SUITE 300 EAST
WASHINGTON, DC 20009
T (202) 724.4400
F (202) 727.5877
WWW.DRES.DC.GOV

DEPARTMENT OF HUMAN SERVICES
64 NEW YORK AVENUE NE
SIXTH FLOOR
WASHINGTON, DC 20002
T (202) 671.4200
F (202) 671.4325
WWW.DHS.DC.GOV

JV ARCHITECT

STUDIOTWENTYSEVENARCHITECTURE
1600 K STREET NW
SUITE 300
WASHINGTON, DC 20006
T (202) 939.0027
F (202) 939.0270
WWW.STUDIO27ARCH.COM

LEO A DALY
1201 CONNECICUT AVENUE NW
TENTH FLOOR
WASHINGTON, DC 20036
T (202) 861.4600
F (202) 872.8130
WWW.LEOADALY.COM

CIVIL ENGINEER

AMT, LLC
10 G STREET NE
SUITE 430
WASHINGTON, DC 20002
(202) 289.4543

STRUCTURAL ENGINEER

ROBERT SILMAN ASSOCIATES
1053 31ST STREET NW
WASHINGTON, DC 20007
T (202) 333.6230
F (202) 318.3015

MEP ENGINEER

METROPOLITAN CONSULTING ENGINEERS
4345 NEBRASKA AVENUE NW
WASHINGTON, DC 20016
T (202) 244.8880

KEY PLAN

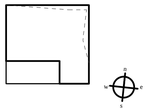

No.	Date	Description
–	21 MAR '12	PERMIT SUBMISSION
–	25 APR '12	BID SET
1	23 MAY '12	ADDENDUM #2

ADDENDUM #2

DRAWING TITLE: DETAILS

DRAWING TYPE: PLUMBING

DRAWING SCALE: NTS

DRAWING DATE: APRIL 23, 2012

PROJECT NUMBER: 1116.00

DRAWING NUMBER: P0.4

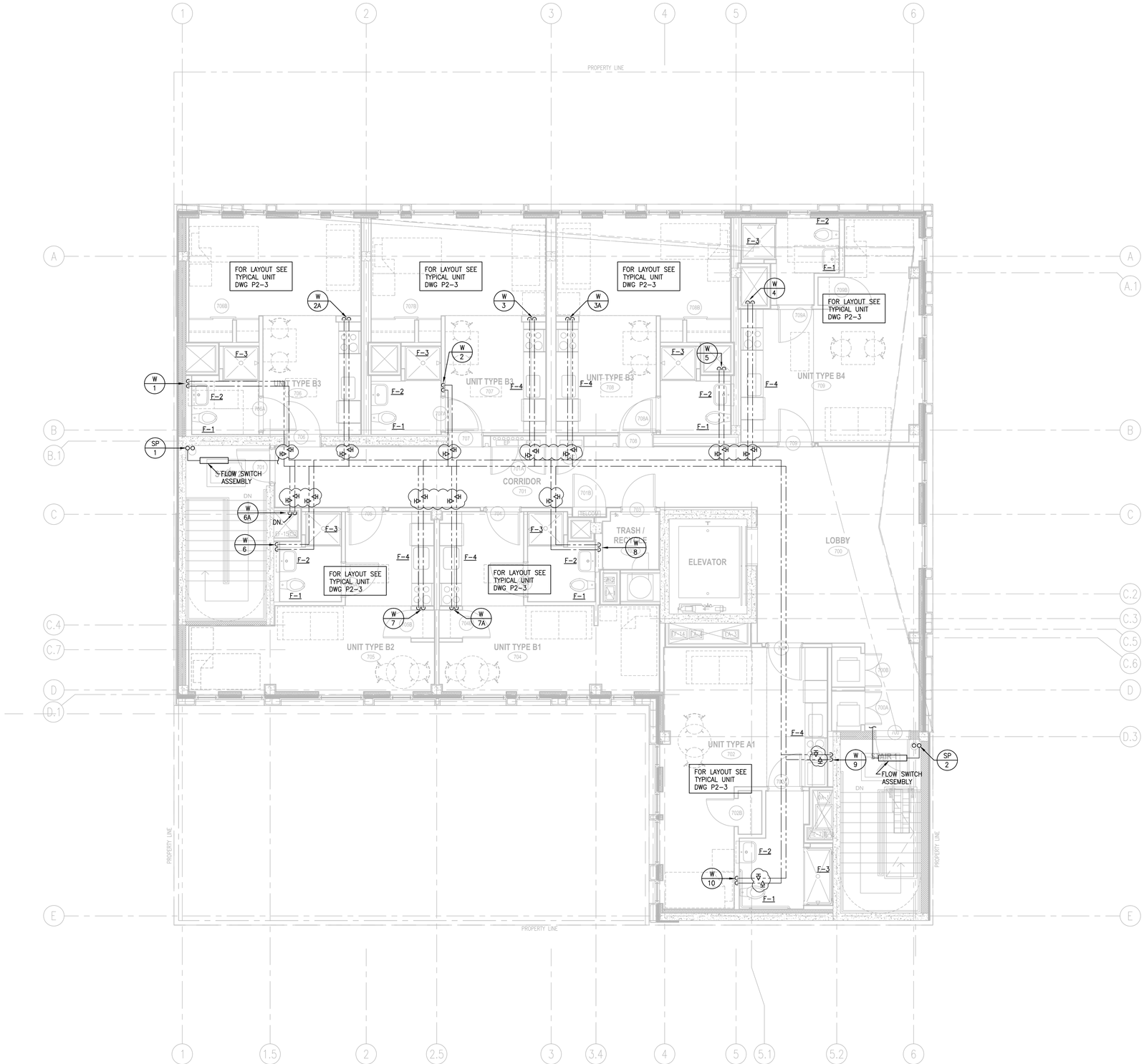

LA CASA
PERMANENT SUPPORTIVE HOUSING

1448 IRVING STREET NW
WASHINGTON, DC

CLIENT + USER

DEPARTMENT OF GENERAL SERVICES
2000 14TH STREET NW
EIGHTH FLOOR
WASHINGTON, DC 20009
T (202) 724.4400
F (202) 727.9877
WWW.DMS.DC.GOV

DEPARTMENT OF HUMAN SERVICES
64 NEW YORK AVENUE NE
SIXTH FLOOR
WASHINGTON, DC 20002
T (202) 671.4200
F (202) 671.4325
WWW.DHS.DC.GOV

JV ARCHITECT

STUDIOTWENTYSEVENARCHITECTURE
1600 8 STREET NW
SUITE 400
WASHINGTON, DC 20006
T (202) 939.8027
F (202) 939.8270
WWW.STUDIO27ARCH.COM

LEO A DALY
1201 CONNECTICUT AVENUE NW
TENTH FLOOR
WASHINGTON, DC 20036
T (202) 861.4600
F (202) 872.8530
WWW.LEOADALY.COM

CIVIL ENGINEER

AMT, LLC
10 G STREET NE
SUITE 430
WASHINGTON, DC 20002
(202) 289.4545

STRUCTURAL ENGINEER

ROBERT SILMAN ASSOCIATES
1053 31ST STREET NW
WASHINGTON, DC 20007
T (202) 333.6230
F (202) 318.3015

MEP ENGINEER

METROPOLITAN CONSULTING ENGINEERS
4341 NEBRASKA AVENUE NW
WASHINGTON, DC 20016
T (202) 244.8880

KEY PLAN

IRVING ST NW

No.	Date	Description
–	21 MAR '12	PERMIT SUBMISSION
–	25 APR '12	BID SET
1	23 MAY '12	ADDENDUM #2

ADDENDUM #2

DRAWING TITLE: SEVENTH FLOOR PLANS - DOMESTIC WATER & GAS

DRAWING TYPE: PLUMBING

DRAWING SCALE: 1/4" = 1'-0"

DRAWING DATE: APRIL 23, 2012

PROJECT NUMBER: 1116.00

DRAWING NUMBER: P2.7

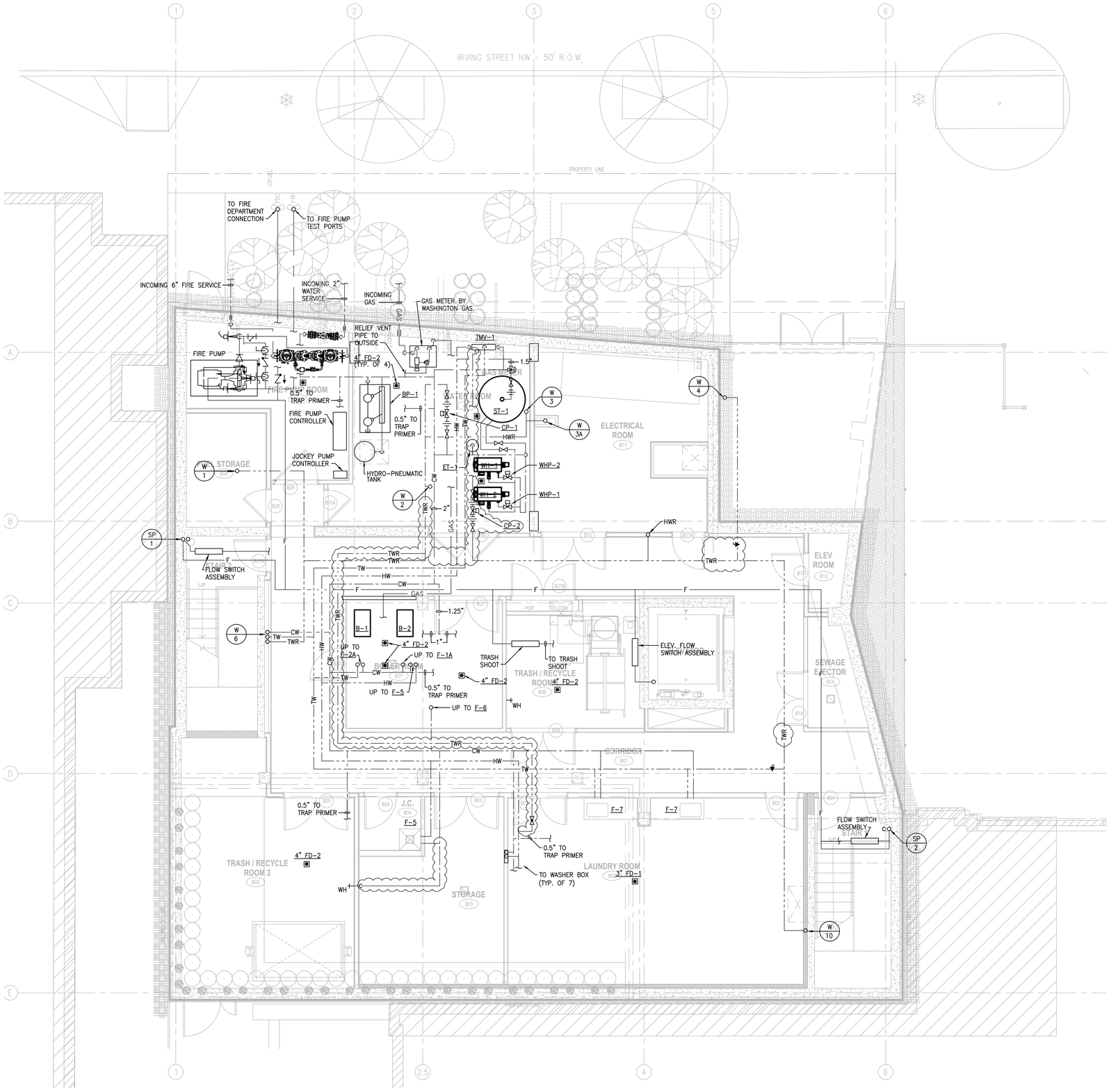

LA CASA
PERMANENT SUPPORTIVE HOUSING

1448 IRVING STREET NW
WASHINGTON, DC

CLIENT + USER

DEPARTMENT OF GENERAL SERVICES
2000 14TH STREET NW
EIGHTH FLOOR
WASHINGTON, DC 20009
T (202) 724-4400
F (202) 727-3477
WWW.DRES.DC.GOV

DEPARTMENT OF HUMAN SERVICES
64 NEW YORK AVENUE NE
SIXTH FLOOR
WASHINGTON, DC 20002
T (202) 671-4200
F (202) 671-4325
WWW.DHS.DC.GOV

JV ARCHITECT

STUDIOTWENTYSEVENARCHITECTURE
1600 K STREET NW
SUITE 400
WASHINGTON, DC 20006
T (202) 939-0027
F (202) 939-6270
WWW.STUDIO27ARCH.COM

LEO A DALY
1201 CONNECTICUT AVENUE NW
TENTH FLOOR
WASHINGTON, DC 20036
T (202) 861-4600
F (202) 872-8530
WWW.LEOADALY.COM

CIVIL ENGINEER

AMT, LLC
10 G STREET NE
SUITE 430
WASHINGTON, DC 20002
(202) 289-4545

STRUCTURAL ENGINEER

ROBERT SILMAN ASSOCIATES
1012 31ST STREET NW
WASHINGTON, DC 20007
T (202) 333.6230
F (202) 318.3015

MEP ENGINEER

METROPOLITAN CONSULTING ENGINEERS
4345 NEBRASKA AVENUE NW
WASHINGTON, DC 20016
T (202) 244.8880

KEY PLAN

IRVING ST NW

No.	Date	Description
-	21 MAR '12	PERMIT SUBMISSION
-	25 APR '12	BID SET
1	23 MAY '12	ADDENDUM #2

ADDENDUM #2

DRAWING TITLE: BASEMENT LEVEL FLOOR PLAN - DOMESTIC WATER & GAS

DRAWING TYPE: PLUMBING

DRAWING SCALE: 1/4" = 1'-0"

DRAWING DATE: APRIL 23, 2012

PROJECT NUMBER: 1116.00

DRAWING NUMBER: P2.B

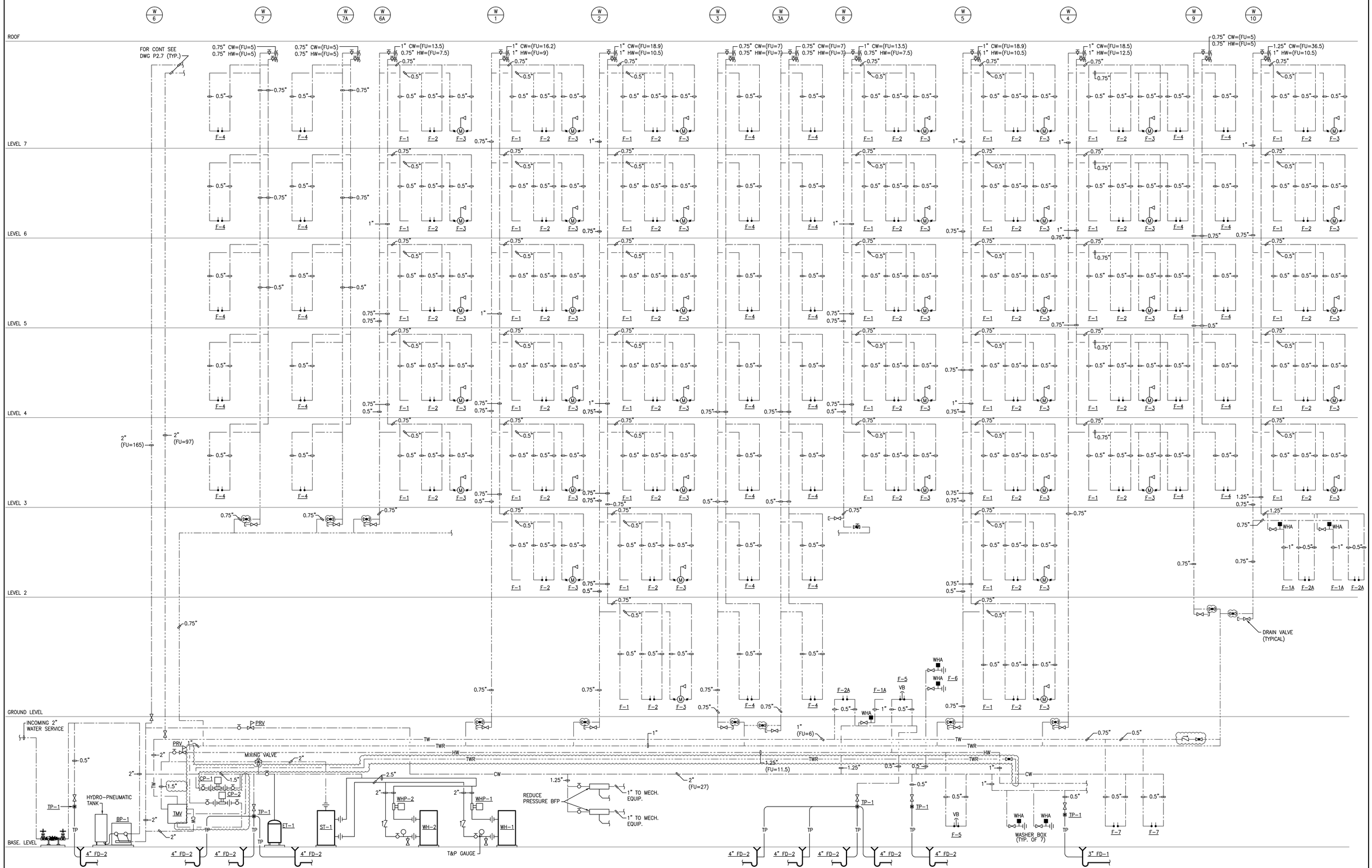

LA CASA
PERMANENT SUPPORTIVE HOUSING

1448 IRVING STREET NW
WASHINGTON, DC

CLIENT + USER

DEPARTMENT OF GENERAL SERVICES
2000 14TH STREET NW
EIGHTH FLOOR
WASHINGTON, DC 20009
T (202) 724.4400
F (202) 727.9877
WWW.DMS.DC.GOV

DEPARTMENT OF HUMAN SERVICES
64 NEW YORK AVENUE NE
SIXTH FLOOR
WASHINGTON, DC 20002
T (202) 671.4200
F (202) 671.4325
WWW.DHS.DC.GOV

JV ARCHITECT

STUDIOTWENTYSEVENARCHITECTURE
1600 X STREET NW
SUITE 800
WASHINGTON, DC 20006
T (202) 939.8027
F (202) 939.8270
WWW.STUDIO27ARCH.COM

LEO A DALY
1201 CONNECTICUT AVENUE NW
TENTH FLOOR
WASHINGTON, DC 20036
T (202) 861.4600
F (202) 872.8120
WWW.LEOADALY.COM

CIVIL ENGINEER

AMT, LLC
10 G STREET NE
SUITE 430
WASHINGTON, DC 20002
(202) 289.4545

STRUCTURAL ENGINEER

ROBERT SILMAN ASSOCIATES
1053 31ST STREET NW
WASHINGTON, DC 20007
T (202) 333.6230
F (202) 318.3015

MEP ENGINEER

METROPOLITAN CONSULTING ENGINEERS
4341 NEBRASKA AVENUE NW
WASHINGTON, DC 20016
T (202) 244.8880

KEY PLAN

IRVING ST NW

No.	Date	Description
-	21 MAR '12	PERMIT SUBMISSION
-	25 APR '12	BID SET
1	23 MAY '12	ADDENDUM #2

ADDENDUM #2

DRAWING TITLE: DOMESTIC WATER - RISER DIAGRAM

DRAWING TYPE: PLUMBING

DRAWING SCALE: NTS

DRAWING DATE: APRIL 23, 2012

PROJECT NUMBER: 1116.00

DRAWING NUMBER: P3.2